Iwaki
Electromagnetic Metering Pump

EWP-L

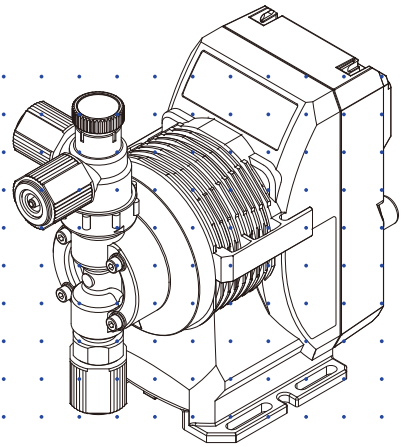

Instruction manual

Thank you for choosing our product.

⚠ Please read through this instruction manual before use.

This instruction manual describes important precautions and instructions for the product. Always keep it on hand for quick reference.

© 2024 IWAKI CO., LTD.

Order confirmation

Open the package and check that the product conforms to your order. If any problem or inconsistency is found, immediately contact your distributor.

a. Check if the delivery is correct

Check the nameplate to see if the information such as model codes, discharge capacity and discharge pressure are as ordered.

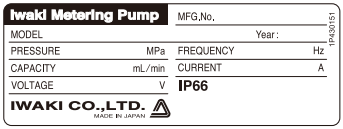

Asia-Australia

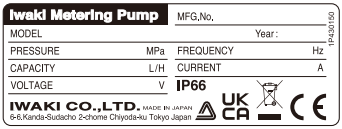

Europe

*The CE/UKCA markings on our product(s) are for us to market the product(s) into the European Union market/ the Great Britain (England, Wales and Scotland) market, however, the CE/UKCA markings do not ensure any safety or conformity of the product(s) outside the EU/GB markets.
When the pump is incorporated into the equipment marketed in the EU/GB markets, such equipment must meet all the requirements of applicable directives/ regulations.
In such a case, any person who places the equipment on the markets must carry CE/UKCA marks on the equipment as a manufacturer.

b. Check accessories are complete



Baseplate (2)
(SH type)



3mm or 4mm hex wrench
(The hex wrench may not be included, depending on the region.)

c. Check if the delivery is damaged or deformed

Check for transit damage and loose bolts.

Contents

Order confirmation **2**

Safety instructions ***6***

WARNING **7**
CAUTION **8**
Precautions for use **10**

Overview ***12***

Introduction **12**
Pump structure & Operating principle 12
Features 13
Part names **14**
Pump 14
Operational panel 15
Identification codes **16**
Pump 16
Operational functions **18**
Manual mode 18
EXT mode 18
■ Analog proportional control (ANA) 18
■ Pulse synchronous control (PLS) 18
STOP functions 19

Installation ***20***

Pump mounting **20**
Plumbing **21**
Tube connection 21
Thread connection 24
Check valve/Back pressure valve mounting 25
Tubing layout (pump with Auto degassing type code) **27**
Wiring **28**

End terminals 28
Power voltage/Earthing 29
■ Pump with the "JA" power plug code 29
■ Pump with the "EU" or "AU" power plug codes 29
Signal wire connection 31
■ EXT IN 33

Operation 34

Before operation 34
Points to be checked 34
Retightening of head bolts 34
■ Use of hex wrench instead of a torque wrench 35
Degassing 36
■ EWP VC/VS/VE/PC/PS/PE/TC/SH with the MAN air vent port 36
■ EWP FC with no MAN air vent port 38
Flow rate adjustment 39
■ Stroke rate adjustment 41
■ Stroke length adjustment 42
Before a long period of stoppage (one month or more) 43
Operation setting 43
Manual operation 43
EXT operation 44
■ Analog proportional control 44
■ Pulse synchronous control 44
Control functions 45
■ STOP function 45

Maintenance 46

Troubleshooting 47
Inspection 48
Daily inspection 48
Periodic inspection 48
Wear part replacement 49

Wear part list 49
Before replacement 50
Valve set replacement 50
■ Discharge valve set disassembly/assembly 50
■ Suction valve set disassembly/assembly 55
■ Auto air vent valve set disassembly/assembly (Auto degassing type only) 56
Diaphragm replacement 57
Exploded view 60
Pump head, Drive unit & Control unit 60
Pump head 61
■ EWP-A/-B/-C/-D/-E/-F VC/VS/VE/PC/PS/PE/TC 61
■ EWP-B/-C/-D/-E/-F FC 62
■ EWP-B/-C/-D/-E/-F SH 63
■ EWP-B PC/PS/PE -H 64
■ EWP-B SH -H 65
■ EWP-E PC/PS -V 66
■ EWP-B/-C/-D VC/VS -A 67
Specifications/Outer dimensions 68
Specifications 68
■ Pump unit 68
■ Control unit 70
■ European power cable 70
■ Australian power cable 70
■ Asian power cable 70
■ Pump color 70
Outer dimensions 71
■ EWP-019A/-038B/-080C/-130D/-270E/-410F/-420F VC/VS/VE/PC/PS/PE/TC . 71
■ EWP-038B/-080C/-130D/-270E/-410F FC 72
■ EWP-038B/-080C/-130D/-270E/-410F SH 73
■ EWP-023B/-054C/-078D VC/VS/VE -C 74
■ EWP-038B PC/PS/PE -H 75
■ EWP-038B SH -H 76
■ EWP-150E PC/PS -V 77
■ EWP-030B/064C/110D VC/VS -A 78
EC DECLARATION OF CONFORMITY 79
UK DECLARATION OF CONFORMITY 80

Safety instructions

Read through this section before use. This section describes important information for you to prevent personal injury or property damage.

■ Symbols

In this instruction manual, the degree of risk caused by incorrect use is noted with the following symbols. Please pay attention to the information associated with the symbols.

⚠ **WARNING**	**Indicates mishandling could lead to a fatal or serious accident.**
⚠ **CAUTION**	**Indicates mishandling could lead to personal injury or property damage.**

A symbol accompanies each precaution, suggesting the use of "Caution", "Prohibited actions" or specific "Requirements".

Caution marks		Prohibited marks		Requirement marks		
						
Caution	Electrical shock	Prohibited	Do not rework or alter	Requirement	Wear protection	Grounding

⚠ Export Restrictions

Technical information contained in this instruction manual might be treated as controlled technology in your countries, due to agreements in international regime for export control.

Please be reminded that export license/permission could be required when this manual is provided, due to export control regulations of your country.

⚠WARNING

Turn off power before service

Risk of electrical shock. Be sure to turn off power to stop the pump and related devices before service is performed.


Electrical shock

Stop operation

If you notice any abnormal or dangerous conditions, suspend operation immediately and inspect/solve problems.


Requirement

Do not use the pump in any condition other than its intended purpose

The use of the pump in any conditions other than those clearly specified may result in failure or injury. Use this product in specified conditions only.


Prohibited

Do not modify the pump

Alterations to the pump carry a high degree of risk. It is not the manufacturer's responsibility for any failure or injury resulting from alterations to the pump.


Do not rework or alter

Wear protective clothing

Always wear protective clothing such as an eye protection, chemical resistant gloves, a mask and a face shield during disassembly, assembly or maintenance work. The specific solution will dictate the degree of protection. Refer to SDS precautions from the solution supplier.


Wear protection

Do not damage the power cable

Do not pull, knot, or crush the power cable. Damage to the power cable could lead to a fire or electrical shock if cut or broken.


Prohibited

Do not operate the pump in a flammable atmosphere

Do not place explosive or flammable material near the pump.


Prohibited

⚠ CAUTION

Qualified personnel only

The pump should be handled or operated by qualified personnel with a full understanding of the pump. Any person not familiar with the product should not take part in the operation or maintenance of the pump.


Requirement

Use specified power only

Do not apply power other than that specified on the nameplate. Otherwise, failure or fire may result. Ensure the pump is properly grounded.


Prohibited

Do not run pump dry

Do not run pump dry for more than 30 minutes (even when the pump runs for degassing). Otherwise, the pump head fixing screws may loosen and liquid may leak. Optimise your system. If the pump runs dry for a long period (for more than 30 minutes), the pump head and the valve guide may deform by friction heat and consequently leakage results.


Caution

Keep electric parts and wiring dry

Risk of fire or electric shock. Install the pump where it can be kept dry.


Prohibited

Ventilation

Fumes or vapours can be hazardous with certain solutions. Ensure proper ventilation at the operation site.


Caution

Do not install/store the pump:

–In a flammable atmosphere.
–In a dusty/humid environment.
–Where ambient temperature can exceed 0-40ºC.
–In direct sunlight or wind & rain.
–Where ambient humidity can exceed 30-90%RH.
Protect the pump with a cover when installing it out of doors.


Prohibited

Spill precautions

Ensure protection and containment of solution in the event of plumbing or pump damage (secondary containment).


Requirement

Do not use the pump in a wet location

The pump is not waterproof. Use of the pump in wet or extremely humid locations could lead to electric shock or short circuit.


Prohibited

Grounding

Risk of electric shock! Always properly ground the pump. Conform to local electric codes.


Grounding

Install a GFCI (earth leakage breaker)

An electrical failure of the pump may adversely affect other devices on the same line. Purchase and install a GFCI (earth leakage breaker) separately.


Electrical shock

Preventative maintenance

Follow instructions in this manual for replacement of wear parts. Do not disassemble the pump beyond the extent of the instructions.


Requirement

Do not use a damaged pump

Use of a damaged pump could lead to an electric shock or death.


Prohibited

Disposal of a used pump

Dispose of any used or damaged pump in accordance with local rules and regulations. If necessary, consult a licensed industrial waste disposal company.


Requirement

Check pump head bolts

Liquid may leak if any of the pump head bolts become loose. Tighten the bolts diagonally and evenly by the following torque before initial operation and at regular intervals (once a three month).

Pump unit	Torque	Bolts
EWP-A/-B/-C/-D	2.16 N•m	M4 hex. socket head bolt
EWP-E	2.55 N•m	M4 hex. socket head bolt
EWP-E-V	2.16 N•m	M4 hex. socket head bolt
EWP-F	2.55 N•m	M5 hex. socket head bolt


Caution

Install a relief valve

Install a relief valve on a discharge line near the pump so as to automatically release the discharge pressure when it exceeds the maximum level.


Requirement

Precautions for use

- Electrical work should be performed by a qualified electrician. Otherwise, personal injury or property damage could result.



- Select a level location, free from vibration, that won't hold liquid. Anchor the pump with four M5 bolts so it doesn't vibrate. If the pump is not installed level, output may be affected.



- When two or more pumps are installed together, vibration may be significant, resulting in poor performance or failure. Select a solid foundation (concrete) and fasten anchor bolts securely to prevent vibration during operation.



- Allow sufficient space around the pump for easy access and maintenance.



- Install the pump as close to the supply tank as possible.



- When handling liquids that generate gas bubbles (sodium hypochlorite or hydrazine solution), install the pump in a cool and dark place. Flooded suction installation is strongly recommended.



- Use care handling the pump. Do not drop. An impact may affect pump performance. Do not use a pump that has been damaged to avoid the risk of electrical damage or shock.



- The pump has a rating of IP66, but is not waterproof. Do not operate the pump while wet with solution or water. Failure or injury may result. Immediately dry off the pump if it gets wet.



- Do not close discharge line during operation. Solution may leak or piping may break. Install a relief valve to ensure safety and prevent damaged plumbing.



- Solution in the discharge line may be under pressure. Release the pressure from the discharge line before disconnecting plumbing or disassembly of the pump to avoid solution spray.



- Wear protective clothing when handling or working with pumps. Consult solution SDS for appropriate precautions. Do not come into contact with residual solution.



- Do not clean the pump or nameplate with a solvent such as benzine or thinner. This may discolour the pump or erase printing. Use a dry or damp cloth or a neutral detergent.



- In accordance with the European Directive 2012/19/EU on waste electrical and electronic equipment (WEEE), this product features the crossed-out wheelie bin symbol. When this product is disposed of in household wastes, toxic components included in it can cause major environmental and human health problems. Use appropriate waste collection systems for recovery and recycling. Contact your local distributor or nearest Iwaki company for the detailed collection systems.



Overview

Pump characteristics, features and part names are described in this section.

Introduction

Pump structure & Operating principle

The EWP series is a diaphragm metering pump which consists of a pump head, a drive unit, and a control unit. A diaphragm is directly driven by electromagnetic force.

Principle of operation

The pulse signal via the control unit generates the electromagnetic force to make reciprocating motion with the assistance of the spring force. The reciprocating motion is transferred to the diaphragm through the shaft and then volumetric change occurs in the pump head. This action transfers liquid along with pump head valve action.

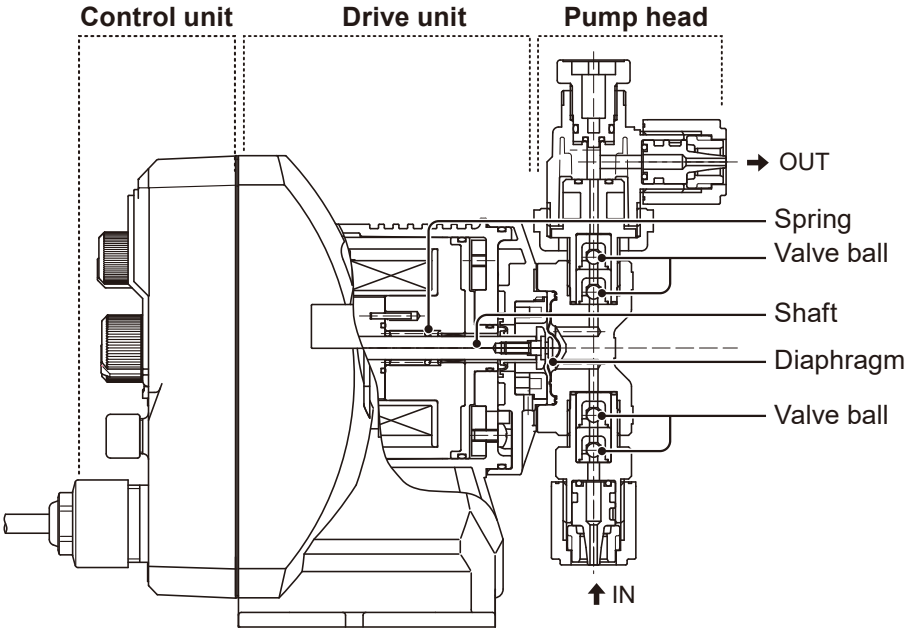

Features

- **Multivoltage operation**
  The EWP series is a multivoltage type (100-240VAC) and can be selected without local power limitations.

- **Simple operation with just two knobs**
  The front panel is simple and can be used intuitively for the stroke rate adjustment of 0 to 100% with fine flow tuning (stroke length adjustment).

- **Waterproof and dustproof structure**
  The sealed unit design assures a rating of IP66.
  *Protect the pump with a cover when installing it out of doors.

- **Two control modes**
  The analog proportional control mode and the pulse synchronous control mode regulate your pump corresponding to the external signal from your device.

- **Highly-efficient solenoid**
  Realizes higher energy saving and downsizing than ever before.

Part names

Pump

Spec label

Adjusting screw

Air vent port
Always connect a tube. Be sure to return the tube end to a supply tank or a container.

Outlet

Air vent body

Caution label

Pump head

Inlet

Base
Always fix with bolts.

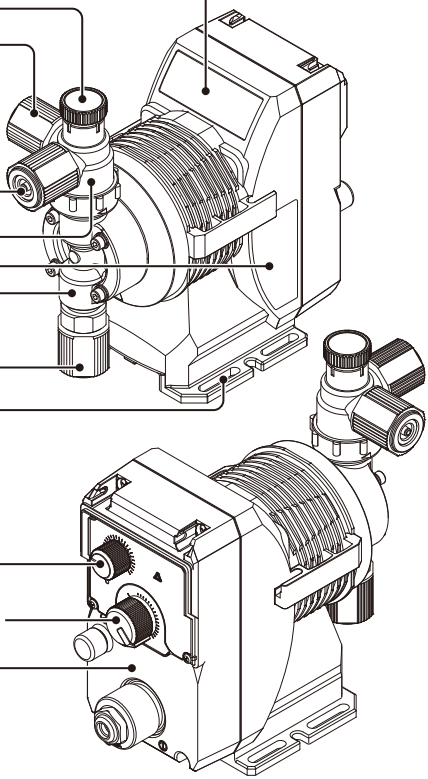

Stroke rate adjusting knob/ PLS/ANA mode selector

Stroke length adjusting knob

Control unit
Used for the start/stop of the pump and stroke rate adjustment/setting.

Pump head

SH type

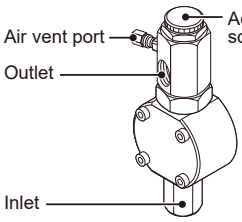

FC

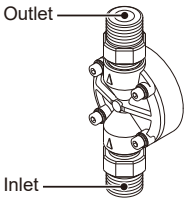

*The FC type does not have an air vent port.

AUTO degassing type

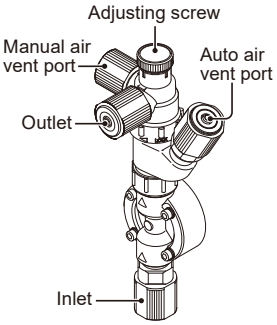

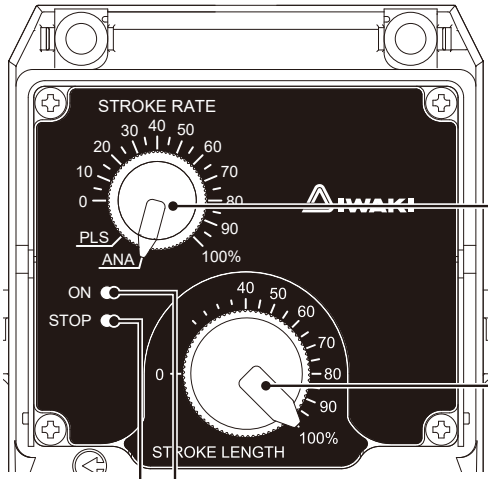

Stroke rate adjusting knob/ PLS/ANA mode selector

Stroke length adjusting knob

ON LED (green)
Blinks with every stroke.

STOP LED (red)
Lights up while the pump receives the STOP signal.

Identification codes

The model codes of the pump represents the following information.

Pump

EWP - 038B VC 01 N - EU L - _

a b c d e f g h

a. Series name

EWP: Multivoltage electromagnetic metering pump

b. Pump unit

Code	Output capacity (mL/min)	Pumphead-Diaphragm code
XXXA	019	A
XXXB	023/ 030/ 038	B
XXXC	054/ 064/ 080	C
XXXD	078/ 110/ 130	D
XXXE	150/ 270	E
XXXF	410/ 420	F

*The numeric code in the “XXX” field varies depending on the wet-end material or the special version.

c. Wet end materials

<table>
<tr><th>Code</th><th>Pump head</th><th>Valve</th><th>Valve seat</th><th>O ring</th><th>Diaphragm</th><th>Gasket</th></tr>
<tr><td>VC</td><td rowspan="3">PVC</td><td>CE</td><td>FKM</td><td>FKM</td><td rowspan="10">PTFE
(bonded to EPDM)</td><td rowspan="10">PTFE</td></tr>
<tr><td>VS</td><td>SUS316 equivalent</td><td rowspan="2">EPDM</td><td rowspan="2">EPDM</td></tr>
<tr><td>VE</td><td rowspan="2">CE</td></tr>
<tr><td>PC</td><td rowspan="3">GFRPP</td><td>FKM</td><td>FKM</td></tr>
<tr><td>PS</td><td>SUS316 equivalent</td><td rowspan="2">EPDM</td><td rowspan="2">EPDM</td></tr>
<tr><td>PE</td><td rowspan="3">CE</td></tr>
<tr><td>TC</td><td rowspan="2">PVDF</td><td>FKM</td><td>FKM</td></tr>
<tr><td>FC</td><td>PCTFE</td><td>—</td></tr>
<tr><td>SH</td><td>SUS316</td><td>HC</td><td>SUS316</td><td>—</td></tr>
</table>

Material code

PVC : Polyvinyl chloride
GFRPP : Glassfiber-reinforced polypropylene
EPDM : Ethylene-propylene rubber
FKM : Fluorine-contained rubber
SUS316 : Austenitic stainless steel
PTFE : Polytetrafluoroethylene
PCTFE : Polychlorotrifluoroethylene
HC : HASTELLOY® C-276 equivalent
CE : Alumina ceramic
PVDF : Polyvinylidene difluoride

d. Connection

Code	Tube I.D. × O.D.	Wet ends	Pump type
01	ø4×ø9 mm	VC/VS/VE/PC/PS/PE	A/B/C/D
02	ø4×ø6 mm	VC/VS/VE/PC/PS/PE/TC	
03	ø6×ø8 mm		
04	ø8×ø13 mm	VC/VS/VE/PC/PS/PE	E/F
05	ø9×ø12 mm		
06	ø10×ø12 mm	TC	
07	ø1/4"×ø3/8"	VC/VS/VE/PC/PS/PE/TC	A/B/C/D
08	ø3/8"×ø1/2"		E/F
09	Rc1/4"	VC/VS/PC/PS/TC/FC/SH	B/C/D/E/F
10	NPT1/4"	FC/SH	
18	ø6×ø11 mm	VC/VS/VE	A/B/C/D
21	ø9×ø12 mm (outlet) ø15×ø22 mm (inlet)	PC-V/PS-V	E
23	ø6×ø12 mm	VC/VS/VE	A/B/C/D/E/F
24	ø5×ø8 mm	VC/VS/VE/TC	A/B/C/D
33	Rc1/4" (outlet) ø4×ø6 mm (inlet/air)	PC-H/PS-H/PE-H	B

e. Special version

PD code*	N	C	H	V	A
A	19 mL/min	–	–	–	–
B	38 mL/min	23 mL/min	38 mL/min	–	30 mL/min
C	80 mL/min	54 mL/min	–	–	64 mL/min
D	130 mL/min	78 mL/min	–	–	110 mL/min
E	270 mL/min	–	–	150 mL/min	–
F	410/420 mL/min	–	–	–	–

N: Standard C: High compression type H: High pressure type
V: High viscosity type A: Auto degassing type
*PD code stands for Pumphead-Diaphragm code (see the left page)

f. Area

Code	Area	Power plug	Cable length
JA	Asia	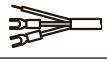	2000 mm
EU	Europe	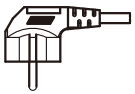	
AU	Australia	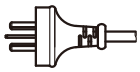	

g. Controller

L: Simple function

h. Automatic air vent materials

Code	Valve	Separate pin	Wet ends
Blank	Zirconia ceramic	Titanium	VC
	SUS316 equivalent	SUS316	VS
HC	Zirconia ceramic	HC	VC
S6	Zirconia ceramic	SUS316	VC

Manual mode

The pump doesn't have an ON-OFF switch. Supplying the rated voltage to the pump starts operation (the ON LED lights up). Discontinuing the voltage supply stops operation (the ON LED goes off).

EXT mode

■ Analog proportional control (ANA)

The pump increases/decreases strokes in proportion to the incoming 4-20mA current signal (between 0 and the maximum stroke rate of the pump that is user-settable).

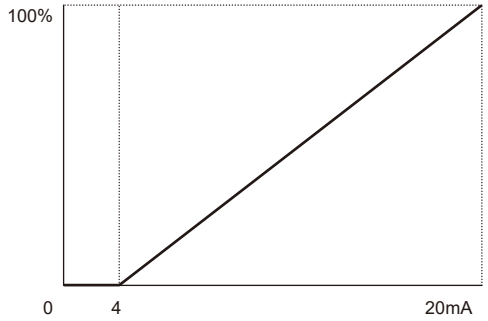

■ Pulse synchronous control (PLS)

The pump increases/decreases strokes in sync with the incoming pulse signal (between 0 and the maximum stroke rate of the pump that is user-settable).

*The pump does not run exceeding the 360spm at any pulse rate.

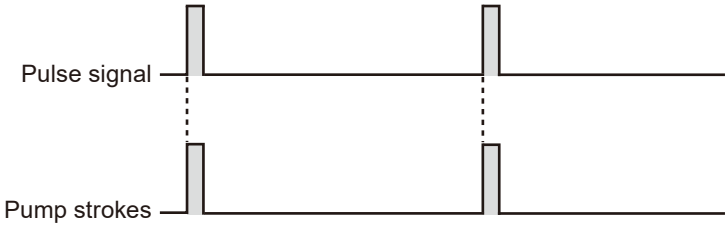

STOP functions

The start/stop of the pump can be controlled by external devices such as a level sensor.

The pump stops while receiving the external signal via the STOP terminal (normally-open contact).

*Opening the STOP circuit resumes pump operation.

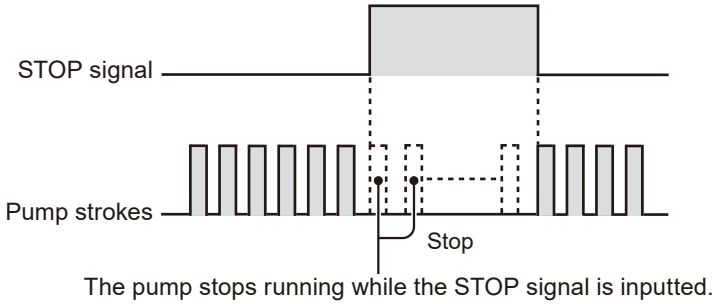

Installation

This section describes the installation of the pump, tubing and wiring. Read through this section before work.

Points to be Observed

- Risk of electrical shock. Be sure to turn off power to stop the pump and related devices before service is performed.
- If you notice any abnormal or dangerous conditions, suspend operation immediately and inspect/solve problems.
- Do not place explosive or flammable material near the pump.
- Do not use a damaged pump. Use of a damaged pump could lead to an electric shock or death.

Pump mounting

Select an installation location and mount the pump.

Necessary tools

- Four M5 bolts (purchase separately)
- Adjustable wrench
- Two baseplates (pumps with SH wet end code)

1 Select a suitable place

Always select a flat floor free of vibration. See page 10 as well.

*Flooded suction is strongly recommended, especially when pumping liquids that readily generate gas bubbles. Sodium hypochlorite and hydrogen peroxide are common examples of such liquids.

2 Place two baseplates on the pump (SH only)

The pump with the SH wet end code is heavier than other models. Always use the attached metal baseplates to reinforce the pump's base.

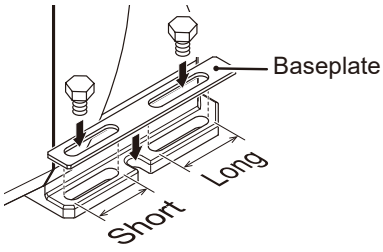

3 **Use the four M5 bolts and fix the pump**

Be sure to fix the base at four points.

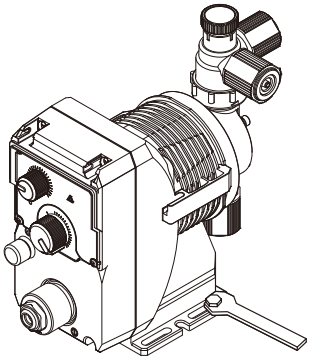

Plumbing

Connect tubes to the pump and install a check valve.

Before operation

• Cut the tube ends flat.

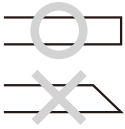

Tube end (side view)

Necessary tools

• 38 mm or wider adjustable wrench

Tube connection

a. Pass the tube through the fitting nut and stopper, and then slide it down onto the adaptor as far as it will go.
b. Put the tube end (adaptor) onto the fitting. Then hand tighten the fitting nut.
c. Retighten the fitting nut by turning it further 180 degrees with an adjustable wrench so it crushes into the tube a little.

*Do not use excessive force when tightening the plastic fitting nut.

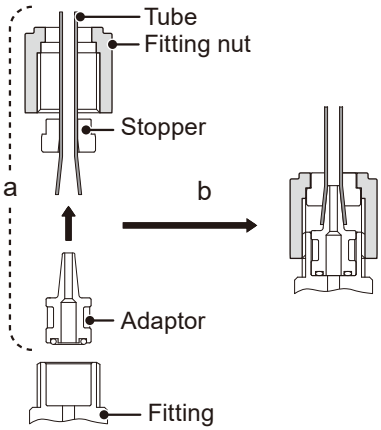

When the tube is removed and then reconnected

a. If the fitting nut, stopper, adaptor, fitting, or tube surface is wet with a chemical liquid, flush with tap water and then dry off. Wet parts won't bite into the tube successfully, and the tube may slips out of the connection with a chemical spill.

b. When removing the connection, if the adaptor has become stuck in the crushed tube and stopper and those parts can not be separated, contact us for a new adaptor/stopper set.

c. Do not reuse the same crushed tube end to reseal the tubing. Cut off the end and start with new tubing to ensure a new seal is established.

d. Use a new tube if the old tube is hardened, swollen, discoloured, cracked, worn, or sticky.

1 Connect tubes into the pump inlet and outlet

*Use the proper tube size depending on wet end materials and the pump type. See page 17.

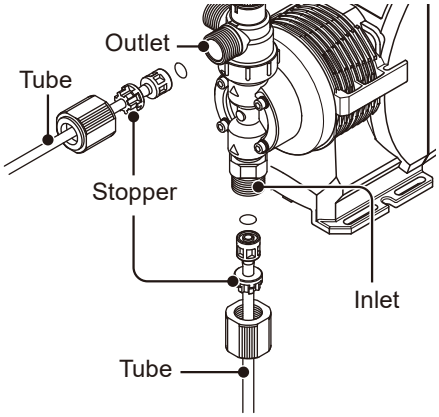

2 Connect a tube to establish the air vent line

Route back the other tube end to a supply tank or a container.

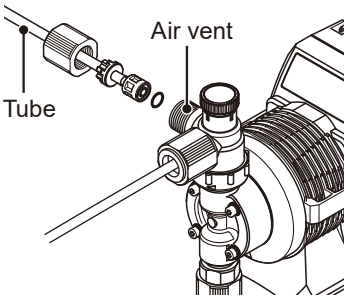

3 Determine the air vent body A direction

a. Loosen the lock nut.

b. Turn the air vent body A to the optimal direction.

c. Hand-tighten the lock nut, holding the air vent body A.

d. Use an adjustable wrench to turn the lock nut 90° further from the hand-tightened point.

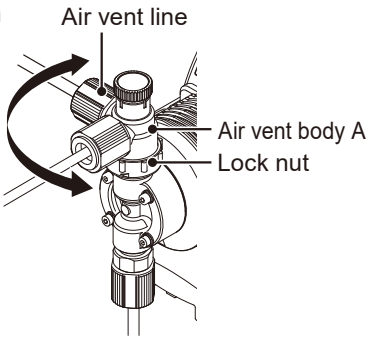

4 Connect an air bleed tube to establish the AUTO air vent line (Auto degassing type only)

Route back the other tube end to a supply tank or a container.

Even after gas is eliminated from the pump, a small amount of liquid is continuously expelled through the air vent path as long as the pump is running (you will see more liquid in siphoning).

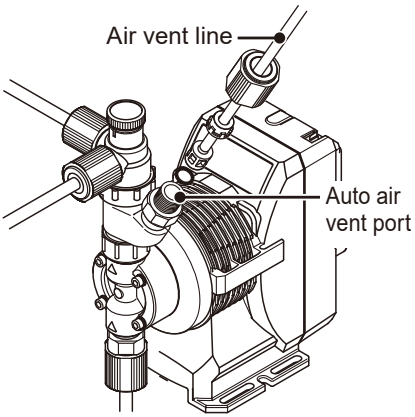

5 Determine the AUTO air vent port direction (Auto degassing type only)

The fitting adaptor can rotate 90 degrees.

a. Loosen the lower lock nut.

b. Turn the fitting adaptor to the optimal direction.

c. Hand-tighten the lower lock nut, holding the fitting adaptor.

d. Use an adjustable wrench or a 32mm spanner to turn the lock nut further 90 degrees.

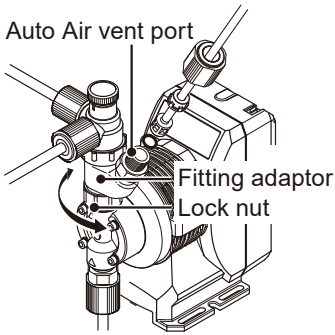

Thread connection

1 **Wrap a sealing tape around the threads of the discharge/ suction pipe and tighten them**

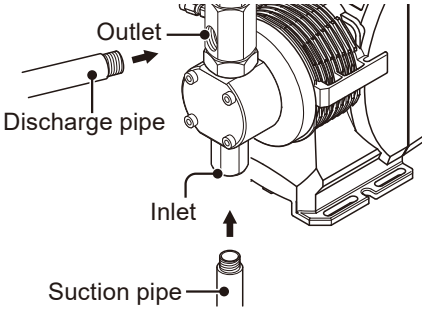

2 **Establish the air vent line**

a. Loosen the nut. Pass the air vent tube through the nut.
b. Slide the air vent tube down into the male thread connector as far as it will go.
c. Hand-tighten the nut.
d. Use an adjustable wrench to turn the nut 450° further from the hand-tightened point.
e. Route back the other tube end to a supply tank or a container.

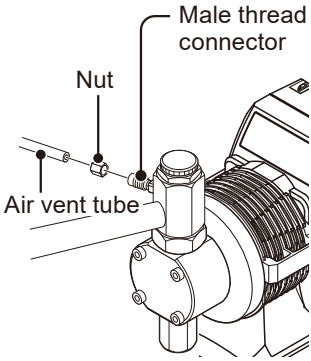

Tubing layout

Flooded suction application

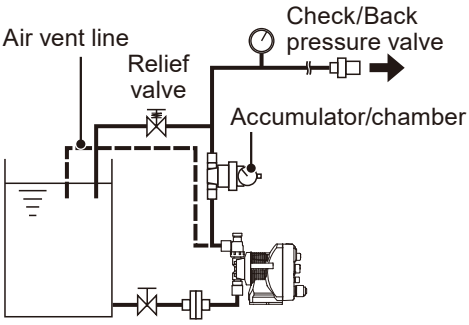

Suction lift application

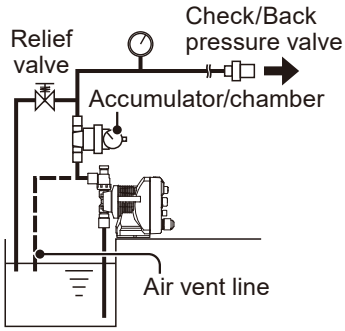

*Flooded suction is strongly recommended, especially when pumping liquids that readily generate gas bubbles. Sodium hypochlorite and hydrogen peroxide are common examples of such liquids.

NOTE

The air vent port is not provided to the EWP with FC wet ends. Purchase separately and install an external air vent valve to your piping as the right diagram shows.

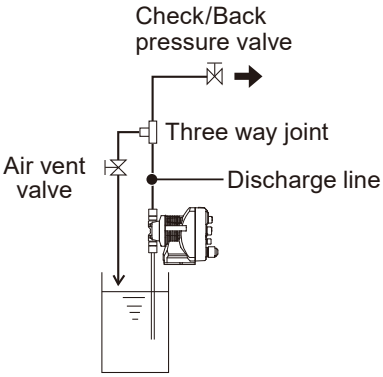

Check valve/Back pressure valve mounting

Install an optional check valve or a back pressure valve to the pump for the prevention of a back flow, siphon and overfeeding. In the following cases be sure to install the check valve.

• A suction side liquid level is higher than the discharge side.

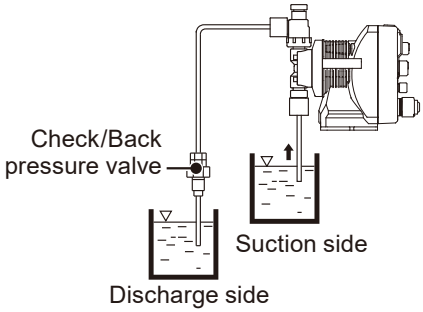

• A suction side liquid level is lower than the discharge side but the height distance is 5 m or below.

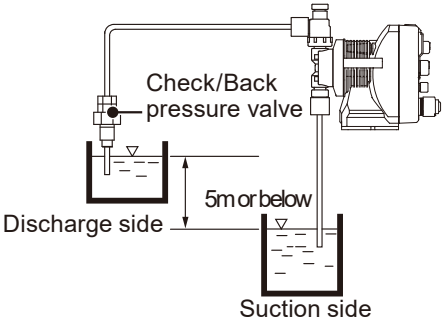

• A suction line pressure is higher than a discharge line pressure.

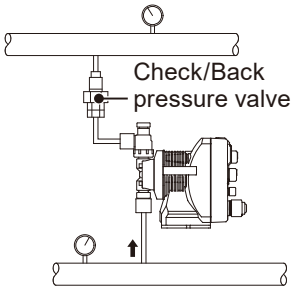

• The back pressure to the pump (including pipe resistance and discharge head) is below 0.13 MPa. (below 0.049 MPa for the EWP-410F/-420F).

1 Mount an optional check valve at the discharge tube end

*The CAN check valve has the R½ and R⅜ thread connections as well as an O.D.9mm tube connection. If required, trim off an amount of the extension tip until it fits your fitting or tee.

NOTE

The maximum allowable tightening torque of the R½ and R⅜ thread connections are 10 N·m. Do not use excessive force when tightening into a pipe.

CAN check valve

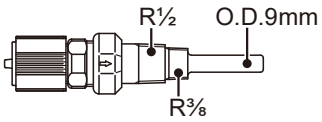

*The CBN check valve (both ends tube connections) and the BVC back pressure valve are optionally available. Contact us or your nearest distributor.

CBN check valve

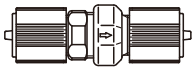

BVC back pressure valve

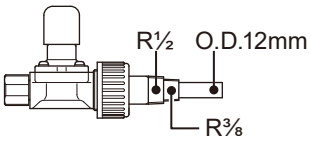

NOTE

- Install a relief valve on a discharge line near the pump so as to automatically release the discharge pressure when it exceeds the maximum level.
- If the set pressure of the check valve plus the injection point pressure to your system is lower than the maximum discharge pressure of the pump, the pump output can exceed the specified point. See page 39 and adjust the output capacity.

Tubing layout (pump with Auto degassing type code)

Flooded suction application

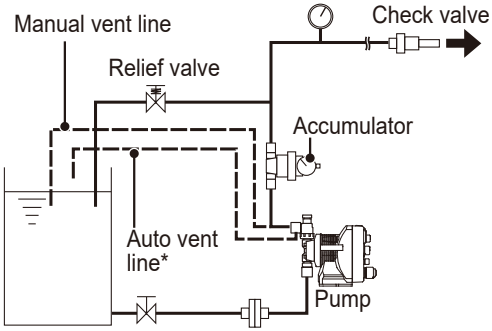

Suction lift application

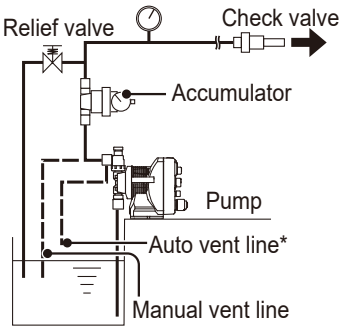

NOTE

*Flooded suction installation is strongly recommended when handling liquids that generate gas bubbles (sodium hypochlorite or hydrazine solution).

*The EWP PC-V/PS-V models require use of a flooded suction installation.

*Install a branched pipe and a relief valve on the discharge line for the prevention of excessive pressure that might be caused by a clogged injection point.

*Ensure that the end of the automatic air vent line is positioned above the liquid level of the supply tank. If the vent line is routed below the liquid level, siphoning may occur.

*When the pump and system are restarted after a long interval, be sure to expel gas from the pump and the suction line manually through the degassing step on page 36.

*When a flooded suction installation is used, keep the suction line as short as possible to ensure proper operation of the automatic degassing system.
An excessively long suction line may trap too much gas, which can exceed the degassing capacity of the pump. However, installing an optional Iwaki DG degassing joint at the pump inlet can help enhance the degassing performance.

*Even after gas is eliminated from the pump, a small amount of liquid is continuously expelled through the air vent path as long as the pump is running (you will see more liquid in siphoning). Be sure to route back the end of the auto air vent line to a supply tank or a container.

*The auto air vent line to a supply tank or a container must be established in the possible shortest distance without any arched line.

*Keep the auto vent line open ended to atmosphere. Do not immerse the tube end in solution in a supply tank.

Wiring

Wiring for a power voltage, earthing and an external signal.

Points to be observed

- Electrical work should be performed by a qualified electrician. Always observe applicable codes or regulations.
- Observe the rated voltage range, or the electrical circuit in the control unit may fail.
- Risk of electrical shock. Be sure to turn off power to stop the pump and related devices before service is performed.
- Risk of electric shock. Replacement of the power cable should be conducted by a manufacturer, his agency or a skilled person.

End terminals

See the following diagram for detail.

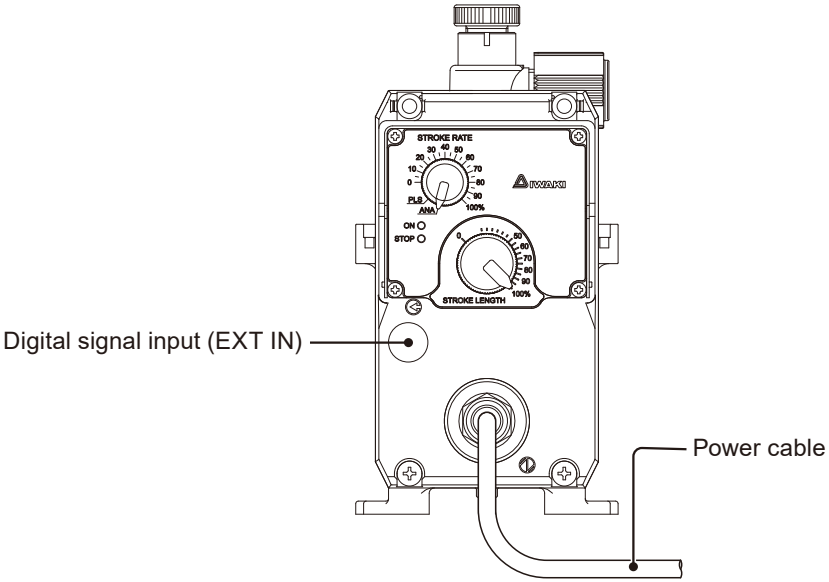

Power voltage/Earthing

Check that the main power is turned off.

■ Pump with the "JA" power plug code

1 **Connect power cable via crimp contacts**

2 **Earth the pump**

Be sure to earth the pump.

■ Pump with the "EU" or "AU" power plug codes

1 **Insert the plug all the way seated in a socket**

This product has two power wires and one earth wire, and is classified as class I.

*This pump is supplied with a grounding-type attachment plug. To reduce the risk of electrical shock, be certain that it is connected only to a properly grounded, grounding type receptacle.

NOTE

- Do not share a power source with a high power device which may generate surge voltage. Otherwise an electronic circuit may fail. The conductive noise caused by an inverter also affects the circuit.
- Energize the pump with a power voltage via a mechanical relay or switch. Do not fluctuate the voltage, or CPU may malfunction. See page 31 for the precautions for ON-OFF control by cycling power.

Apply power sharply

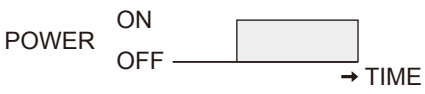

Do not apply gradually



- Use a circuit protector (250VAC, 3A Medium speed) as necessary.
- Do not use a motor thermal relay.

Surge voltage

The electronics within the pump can be damaged by excessive surges in voltage. Do not install the pump near high-power electrical equipment that generates high surge voltages. Avoid branch circuits that also supply power to heavy or other equipment that could generate electrical interference. If necessary,

• install a surge suppression device (such as a varistor with a resistance greater than 2000A)

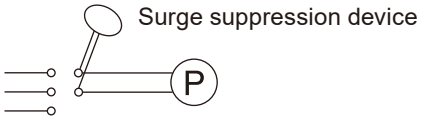

Recommended varistors

Panasonic	ERZV14D431
KOA	NVD14UCD430

See manufacturer's catalogues for detail.

• or a noise-reducing transformer at the pump’s power connection.

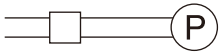

Noise-reducing transformer

Precautions for ON-OFF control by cycling power

The control unit is equipped with a CPU. To ensure the CPU to work properly, always start/stop the pump with the STOP signal for ON-OFF control. Try not to turn on and off the main power. Otherwise, observe the following points:

- Ensure the minimum OFF time of 10 minutes.
- When using a mechanical relay for ON-OFF operation, its contact capacity should be 5A or more. Or a contact point may break.
- If a mechanical relay with the contact capacity of 5A is used, the maximum allowable number of power cycles is limited to 150,000 times. Use the contact capacity of 10A or more when the power cycles exceed that number or when a power source is shared with a large capacity equipment which may cause a surge voltage and damage a contact point.
- Even the large mechanical relay may not last forever. If further longer life is desirable, use a SSR (Solid State Relay) such as the OMRON G3F that does not have a mechanical contact point. Note this product is not designed to be operated with a zero-crossing SSR. See manufacturer's catalogs and make sure a non zero-crossing SSR is selected.

Signal wire connection

Points to be checked

- Check that the main power is turned off.

Applicable cables

Use our optional connector cable for the EXT IN signal (or Binder 99-0436-10-05 Series 713) or purchase a 5-pin female connector cable when using signal input.

NOTE

- Do not install these signal cables in parallel with a power cable. Otherwise the electromagnetic induction noise is generated and malfunction or failure may result.
- When using an external SSR for signal input, such a semiconductor relay must be capable of handling the maximum applied voltage from the pump (5V with 2.3mA). Also, its leak current must be 0.1mA or below.
  See specs of the selected SSR. The following SSRs at least meet the requirements:
  - OMRON G3TA-IDZR02S-US or G3TA-IDZR02SM-US
- When using an external mechanical relay for signal input, such a relay must be capable of handling the maximum applied voltage from the pump (5V with 2.3mA). Its minimum application load should be 1mA or less.
- Insert the DIN 5-pin female connector as far as it will go and then tighten the locking collar to make a secure connection.
- Connect the signal cables to external devices which are protected by double or reinforced insulation.

*Use either an external no-voltage contact or an external open collector for the signal line wiring.

■ EXT IN

Wiring diagram

To make the analog proportional control, pulse synchronous control, or to activate the STOP functions, use the EXT IN terminal via a DIN 5-pin connector.

- ***When using an open collector signal from an external device to the pump:***
  An open collector signal is polarity sensitive. Use the PLS IN (POSITIVE) and the COM (GND) typically for the pulse signal input.
- ***When using an analog signal from the 4-20 mA signal generator:***
  Polarity Sensitive. Connect the 4-20mA line to the ANA IN (positive) and COM. The input resistance is 220Ω.
- ***When using a dry contact signal from an external device to the pump:***
  A dry contact signal is generally not polarity sensitive. Use the STOP IN and the COM typically the stop signal input. Use a mechanical relay or switch designed for an electronic circuit. Its minimum application load should be 1mA or less.

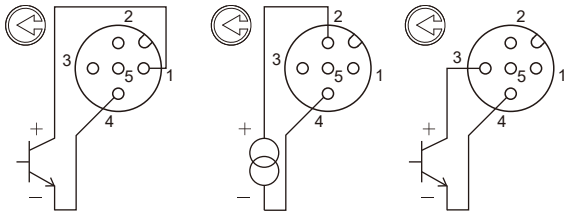

1 : PLS IN + (Brown)
2 : ANA IN + (White)
3 : STOP IN + (Blue)
4 : COM (Black)
5 : N.C. (Grey)

Pin assignment

Electrically connect the pump and you device.

Input	Terminals		EXT controls/functions
	+	–	
PLS IN	PIN 1 (Brown)	PIN 4 (Black)	Pulse synchronous control
ANA IN	PIN 2 (White)	PIN 4 (Black)	Analog proportional control
STOP IN	PIN 3 (Blue)	PIN 4 (Black)	STOP function

Operation

This section describes pump operation and setting.
Run the pump after pipework and wiring are completed.

Before operation

First check tubing and wiring are correct. And then perform degassing and flow rate adjustment before starting operation.

Points to be checked

Before operation, check if:

- Liquid level in a supply tank is enough.
- Tubing is securely connected and is free from leakage and clogging.
- Discharge/suction valves are opened.
- A power voltage is in the allowable range.
- Electrical wiring is correct and is free from the risk of short circuit and electrical leakage.

Retightening of head bolts

Important

Head bolts may loosen when plastic parts creep due to temperature change in storage or in transit. This could lead to a chemical leak. Tighten the bolts diagonally and evenly by the rated torque at each model before initial operation and at regular intervals (every three months).

Tightening torque

Pump unit	Torque	Bolts
EWP-A/-B/-C/-D	2.16 N•m	M4 hex. socket head bolt
EWP-E	2.55 N•m	M4 hex. socket head bolt
EWP-E-V	2.16 N•m	M4 hex. socket head bolt
EWP-F	2.55 N•m	M5 hex. socket head bolt

■ **Use of hex wrench instead of a torque wrench**

1 **Fasten the four fixing bolts as tight as can be with the straight long part of a hexagon wrench**

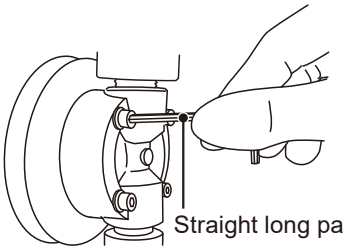

2 **Further turn the cap bolts clockwise 90° with the short part**

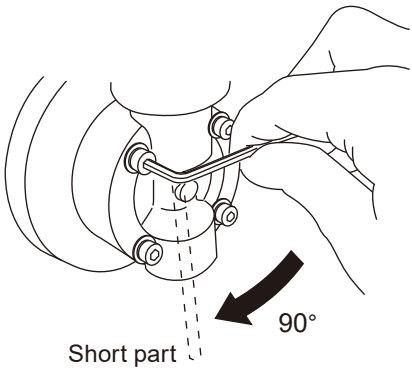

Degassing

The gas in the pump and tubing is the obstacle to liquid delivery and needs to be expelled before the pump is started. Especially:

- When the pump starts to run for the first time
- When a flow rate is too low
- After liquid is replaced in a supply tank
- After a long period of stoppage
- After maintenance and inspection are performed

NOTE

- Both gas and chemical come out together through an air bleed tube. Make sure the end of the tube is located in a supply tank or a container.
- Some chemicals are harmful or attack non-wetted parts. Wash/wipe chemicals off immediately if getting wet.

■ EWP VC/VS/VE/PC/PS/PE/TC/SH with the MAN air vent port

Points to be checked

- The stroke rate adjusting knob is at the 0% position.
- The air bleed tube is connected to the pump.
- The STOP signal is NOT entered.

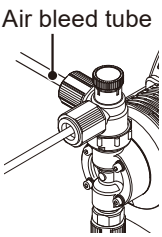

1 **Turn on power**

The ON LED lights up.

2 **Set the stroke rate adjustment knob to the 100% position**

The pump runs at the maximum speed.

3 **Rotate the adjusting screw two revolutions counterclockwise to open the air vent port**

*Do not rotate it three revolutions. Otherwise, the adjusting screw may come off with solution spray.

Adjusting screw

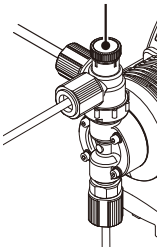

4 **Keep the pump running for more than ten minutes for degassing**

5 **Reduce the stroke rate knob to the 0% position**

The pump stops operation.

6 **Rotate the adjusting screw clockwise to close the air vent port**

7 **Check liquid is delivered to the discharge line**

Degassing must be repeated until liquid is outputted from the pump outlet.

8 **Check connections for leakage**

Degassing has now been completed.

■ EWP FC with no MAN air vent port

No air vent port is provided to the pump with the FC wet end code. Branch the main flow line (discharge side) to establish an open-ended air vent line.

1 **Establish an air vent line to your system**

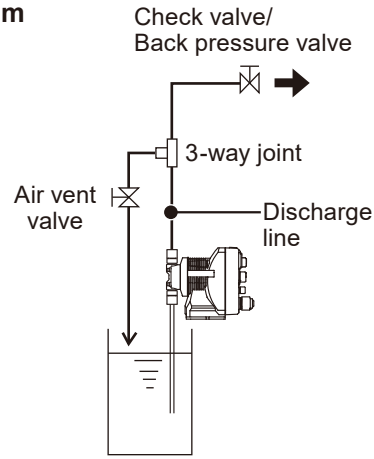

2 **Turn on power**

The ON LED lights up.

3 **Open the air vent valve and set the stroke rate adjustment knob to the 100% position**

The pump runs at the maximum speed.

4 **Keep the pump running for more than ten minutes for degassing**

5 **Reduce the stroke rate knob to the 0% position.**

The pump stops operation.

6 **Close the air vent valve**

7 **Check liquid is delivered to the discharge line**

Degassing must be repeated until liquid is outputted from the pump outlet.

8 **Check connections for leakage**

Degassing has now been completed.

Flow rate adjustment

The flow rate can be adjusted by modulating a stroke rate and stroke length. The stroke rate represents the pump speed in %. The stroke rate adjustment is the main way to adjust the flow rate from the pump.
The stroke length represents the moving distance of the shaft. The widest moving distance is defined as 100% stroke length. The stroke length adjustment is used for determining the optimal volume pumped per stroke (fine adjustment of the pump flow).
First adjust the flow rate with the stroke rate adjustment. Use stroke length adjustment for the range where the stroke rate adjustment can not reach.
Note the optimal stroke length changes with operating conditions and liquid characteristics.

The following procedure is recommended.

1 **With the stroke length 100%, adjust the stroke rate to meet the desired output**

See the "Stroke rate adjustment" section (page 41) and the "Stroke length adjustment" section (page 42) for detail.

2 **Measure the pump output**

3 **If the measured output is lower/higher than the desired level, increase/decrease strokes and measure the pump output again**

4 **Adjust the stroke length for fine adjustment**

5 **Measure the output again to see if the desired output is obtained**

Flow rate, stroke rate and stroke length

EWP-A

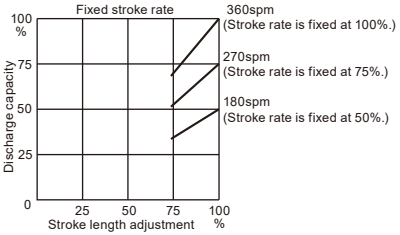

EWP-B

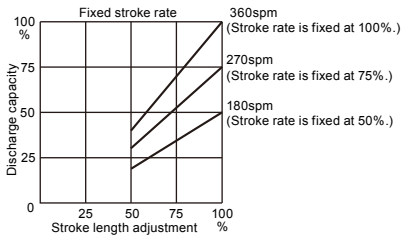

EWP-C/-D/-E/-F

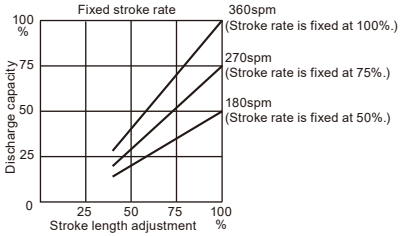

NOTE

- When back pressure is high, set the stroke length to 100% and adjust the pump flow by modulating the stroke rate.
- When each dose greatly affects a chemical reaction in neutralization or titration application, shorten the stroke length to reduce the volume pumped per stroke. And then tune the stroke rate to finalize.
- When handling liquids that readily generate gas bubbles (sodium hypochlorite or hydrazine solution), set the stroke length to 100% and adjust the pump flow by modulating the stroke rate. Note air lock may occur when the stroke length is set too short.

■ Stroke rate adjustment

The stroke rate can be set by the stroke rate adjusting knob from 0 to 100%.

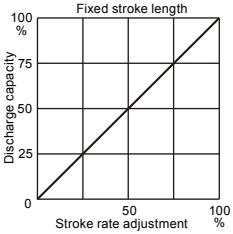

*The nameplate shows the maximum (100%) output with the full stroke rate and length.

1 **Turn on power**

The ON LED lights up.

2 **Turn the stroke rate adjusting knob to the desired rate (%)**

■ Stroke length adjustment

The stroke length can be adjusted when the moving distance of the shaft is changed with the stroke length adjusting knob.

Model	Allowable range
EWP-A	70-100%
EWP-B	50-100%
EWP-C/-D/-E/-F	40-100%

EWP-A

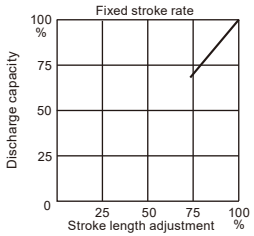

EWP-B

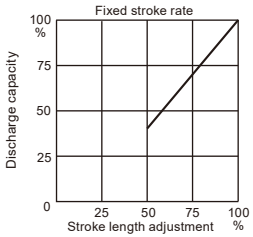

EWP-C/-D/-E/-F

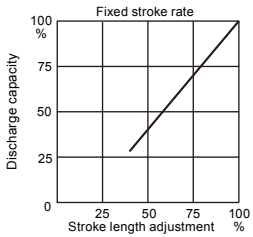

NOTE

- Do not rotate the stroke length adjusting knob when the pump is not running.
- Do not set the stroke length out of the allowable range where the output capacity is not assured.

1 **Turn on power**

The ON LED lights up.

2 **Rotate the stroke length knob to determine liquid volume per stroke**

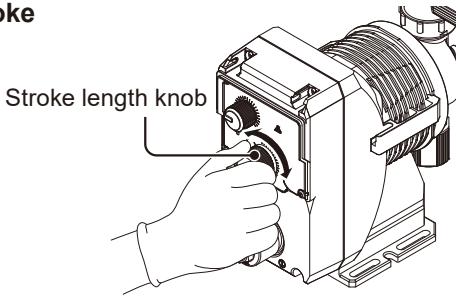

Before a long period of stoppage (one month or more)

Clean wet ends and the inside of tubing:

• Run the pump with clean water for about 30 minutes to rinse chemicals off from the pump head and piping.

Before unplugging the pump:

• The pump unintentionally starts to run as powered on, discharging liquid. Always reduce the stroke rate knob to the 0% position before unplugging the pump.

When the pump does not transfer liquid:

• Clean the valve sets and remove foreign matter.

• If gas is in the pump head, expel gas and readjust the output capacity. See the "Degassing" section on page 36 and the "Flow rate adjustment" section on page 39 for detail.

Operation setting

Manual operation

Run or stop the pump with the stroke rate/length knob.

1 **Turn on power**

The ON LED lights up.

2 **Turn the stroke rate adjusting knob to the desired rate (%)**

Use the knob scale only for reference. If you need higher accuracy, run the pump in the actual operating condition, use a laboratory beaker or cylinder to correct the liquid from the pump for one minute, and then you will have the actual output capacity of the pump per minute.

3 **To stop the pump, reduce the stroke rate knob to the 0% position**

EXT operation

The pump operation is controlled by the external signal. First, see page 33 to hardwire the EXT IN terminals with your device (e.g. an analog signal generator or a pulse signal generator).

■ Analog proportional control

1 **Turn on power**
The ON LED lights up.

2 **Turn the stroke rate adjusting knob to the ANA position**

3 **Enter the 4-20mA signal and run the pump**
The pump stops as the signal is reduced to 4 mA or below.

■ Pulse synchronous control

1 **Turn on power**
The ON LED lights up.

2 **Turn the stroke rate adjusting knob to the PLS position**

3 **Enter the 0-6Hz pulse signal and run the pump**
The pump stops as the signal is reduced to 0 Hz.

■ STOP function

The start/stop of the pump can be controlled by external devices such as a level sensor with a normally-open switch.

Maintenance

This section describes troubleshooting, inspection, wear part replacement, exploded views and specifications.

Important

- Follow instructions in this manual for replacement of wear parts. Do not disassemble the pump beyond the extent of the instructions.
- Always wear protective clothing such as an eye protection, chemical resistant gloves, a mask and a face shield during disassembly, assembly or maintenance work. The specific solution will dictate the degree of protection. Refer to SDS precautions from the solution supplier.
- Risk of electrical shock. Be sure to turn off power to stop the pump and related devices before service is performed.

Before unplugging the pump

The pump unintentionally starts to run as powered on, discharging liquid. Always reduce the stroke rate knob to the 0% position before unplugging the pump.

NOTE

- It's not the manufacturer's responsibility for any failure due to corrosion or erosion occurred in your operating condition.
- For the need of repair, contact your distributor of Iwaki or the manufacturer of equipment in which our product is built.
- Be sure to drain chemicals and flush the inside of the pump before return so that a harmful chemical does not spill out in transit.

Troubleshooting

First check the following points. If the following measures do not help remove problems, contact us or your nearest distributor.

States	Possible causes	Solutions
The pump does not run. (LED does not light.)	Power voltage is too low.	• Observe the allowable voltage range of 90-264VAC.
	The pump is not powered.	• Check the switch if it is installed. • Correct wiring. • Replace a broken wire to new one.
Pump does not prime.	Pump is air locked.	• Prime pump per instructions. See page 36.
	Air in suction tubing.	• Reroute suction tubing to eliminate air trap.
	A valve set is installed upside down.	• Reinstall the valve set.
	Valve gasket is missing.	• Install valve gasket.
	Foreign matter is stuck in the valve ball in the pump head.	• Take apart, inspect and clean the valves. Replace as necessary.
	A valve ball is stuck on a valve seat.	• Take apart, inspect and clean the valve. Replace as necessary.
Output fluctuates.	Air is trapped in the pump.	• Prime pump per instructions. See page 36.
	Overfeeding	• Purchase separately and mount the check valve. See page 25.
	Foreign matter is stuck in the valve ball in the pump head.	• Take apart, inspect and clean the valves. Replace as necessary.
	Diaphragm is damaged.	• Replace diaphragm. See page 57.
	Pressure fluctuates at an injection point.	• Maintain a pressure constant at an injection point by optimizing tubing or by relocating the point.
Liquid leaks.	The fitting, the fitting nut or the air vent body is loose.	• Retighten them.
	Pump head is loose.	• Retighten the pump head bolts. See page 34 for the rated torque.
	O rings or valve gaskets are missing.	• Install O rings and valve gaskets in place.
	Diaphragm is damaged.	• Replace diaphragm. See page 57.
	Excessive discharge pressure.	• Check that the discharge line is not closed. • Check if tubing is not clogged.

Inspection

Perform daily and periodic inspection to keep pump performance and safety.

Daily inspection

Check the following points. If you notice any abnormal or dangerous conditions, suspend operation immediately and inspect/solve problems. See the troubleshooting section as necessary.
When wear parts come to the life limit, replace them with new ones. Contact us or your nearest distributor for detail.

No.	States	Points to be checked	How to check
1	Pumping	• If liquid is pumped.	Flow meter or visual inspection
		• If the suction and discharge pressure are normal.	Check specifications.
		• If liquid has deteriorated, crystallized or precipitated.	Visual or audio inspection
2	Noise and vibration	• If abnormal noise or vibration occurs. They are signs of abnormal operation.	Visual or audio inspection
3	Air ingress from pump head joints and the suction line	• If pumped liquid includes air bubbles, check the line for leakage and loose connection and retighten as necessary.	Visual or audio inspection

Periodic inspection

Retighten the pump head bolts evenly to the following torque in diagonal order.

*Head bolts may loosen in operation. How fast the bolts start to loosen is depending on operating conditions.

Tightening torque

Pump unit	Torque	Bolts
EWP-A/-B/-C/-D	2.16 N•m	M4 hex. socket head bolt
EWP-E	2.55 N•m	M4 hex. socket head bolt
EWP-E-V	2.16 N•m	M4 hex. socket head bolt
EWP-F	2.55 N•m	M5 hex. socket head bolt

*A hexagon wrench can be used for a torque wrench. See page 35.

Wear part replacement

To run the pump for a long period, wear parts need to be replaced periodically. It is recommended that the following parts are always stocked for immediate replacement. Contact us or your nearest distributor for detail.

Precautions

- Solution in the discharge line may be under pressure. Release the pressure from the discharge line before disconnecting plumbing or disassembly of the pump to avoid solution spray.
- Rinse wet ends thoroughly with tap water.
- Each time the pump head is taken apart, replace the diaphragm, O rings, and valve sets with new ones.

Wear part list

<table>
<tr><th colspan="5">Parts</th><th># of parts</th><th>Estimated life</th></tr>
<tr><td rowspan="2">Valve set</td><td>VC/VS/VE/
PC/PS/PE/TC</td><td>FC</td><td>SH</td><td>PC-V/PS-V</td><td rowspan="2">2 sets</td><td rowspan="5">8000 hours</td></tr>
<tr><td>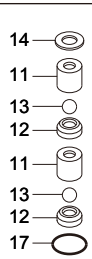
</td><td>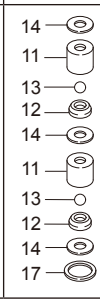
</td><td>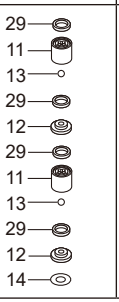
</td><td>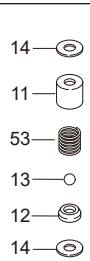
</td></tr>
<tr><td>Diaphragm</td><td colspan="3">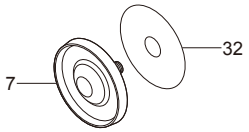

*The rear diaphragm sheet (32) is provided to the High pressure type only.</td><td>1</td></tr>
<tr><td>O ring</td><td colspan="3">

(except the FC and SH types)</td><td>See page 61 to 67.</td></tr>
<tr><td>Automatic air vent valve set</td><td colspan="3">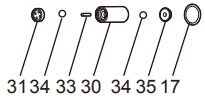
</td><td>1</td></tr>
</table>

*Wear part duration varies with the pressure, temperature and characteristics of liquid.
*The estimated life is calculated based on the continuous operation with clean water at ambient temperature.

Before replacement

First release pressure from the pump head and the discharge line.

1 **Stop the pump operation**

2 **Rotate the adjusting screw two revolutions counterclockwise to open the air vent port**

NOTE

Do not rotate it three revolutions from the closed position. Or liquid may come out from the adjusting screw.

*The air vent adjusting screw is NOT provided to the pumps with the FC wet end code. Establish an air vent line with an air vent valve and adjust the valve manually to expel gas from the pump and system before operation (see the sketch on page 38 as well.). In the case the air vent line is unable to be built, you have no choice but to remove the discharge line while it is under pressure. This is not totally recommended; however, use a cloth around the fitting nut of the check valve several times until it can be a protection against solution spray and the check valve is safely removed from the discharge tube.

3 **Check the pump head and the discharge line are depressurized**

Liquid pressure is released from the air vent line in the form of solution spray.

NOTE

If pressurized liquid is not expelled, run the pump with an opened air vent line until pressure is removed.

Valve set replacement

■ Discharge valve set disassembly/assembly

Necessary tools

- 38 mm or wider adjustable wrench
- A pair of tweezers

*Unfix the pump base before disassembly.

1 **Remove the fitting nut, the discharge tube, and the air bleed tube**

NOTE

Rinse chemicals or crystals off the parts as necessary.

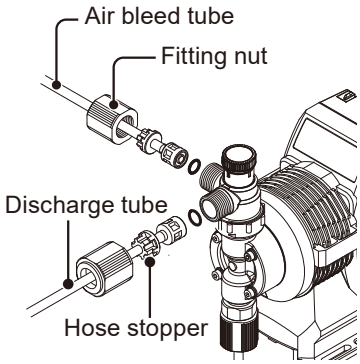

2 **Turn the lock nut counterclockwise and remove the air vent body A**

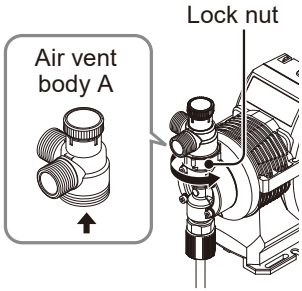

3 **Use an adjustable wrench and remove the air vent body B**

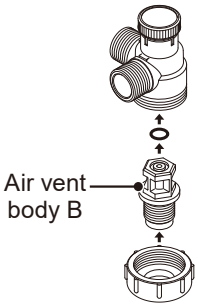

4 **Pull out the valve set with a pair of tweezers**

5 **Build up the new valve set into the pump head and hand-tighten the air vent body B through the lock nut as far as it will go**

Retighten the air vent body B by a further 90° with an adjustable wrench.

*There are many small parts in the liquid end. These parts must be installed correctly for proper operation of the pump (no leak or good pump output). Be sure both valve seats are in the same orientation. See the exploded view pages, also.

*Be sure to fit O rings and gaskets are in place.

*Keep the valve set clean.

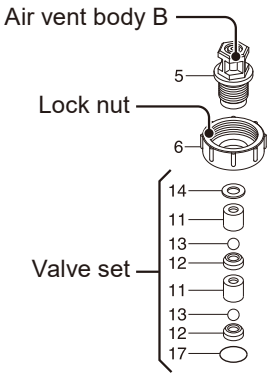

6 **Remount the air vent body A using the lock nut and connect tubes**

EWP-B/-C/-D/-E/-F FC

1 **Remove the pipe**

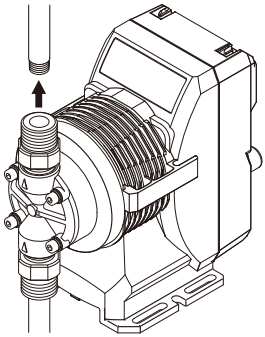

2 **Use an adjustable wrench and remove the fitting**

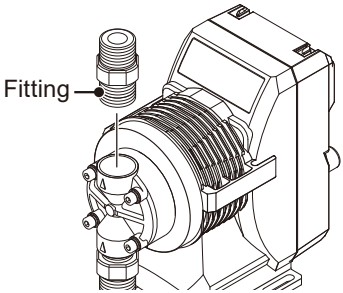

3 **Pull out the valve set with a pair of tweezers**

4 **Build up the new valve set into the pump head and hand-tighten the fitting as far as it will go**

Retighten it by a further 90° with an adjustable wrench.

*There are many small parts in the liquid end. These parts must be installed correctly for proper operation of the pump (no leak or good pump output). Be sure both valve seats are in the same orientation. See the exploded view pages, also.

*Be sure to fit gaskets are in place.

*Keep the valve set clean.

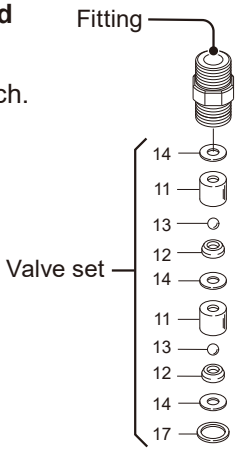

5 **Remount the pipe**

EWP-B/-C/-D/-E/-F SH

1 **Remove the discharge pipe and the air bleed tube**

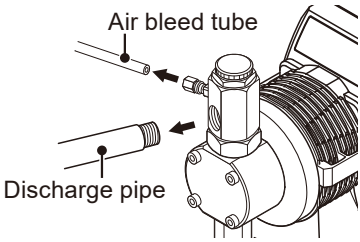

2 **Use an adjustable wrench to remove the lock nut and the air vent body A**

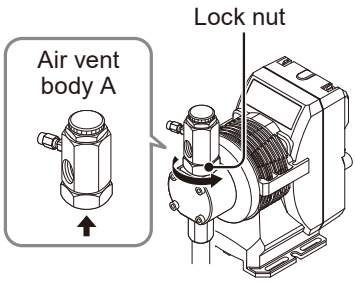

3 **Use an adjustable wrench and remove the air vent body B**

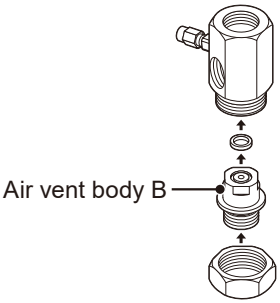

4 **Pull out the valve set with a pair of tweezers**

5 **Build up the new valve set into the pump head and hand-tighten the air vent body B through the lock nut as far as it will go**

Retighten the air vent body B by a further 90° with an adjustable wrench.

*There are many small parts in the liquid end. These parts must be installed correctly for proper operation of the pump (no leak or good pump output). Be sure both valve seats are in the same orientation. See the exploded view pages, also.

*Be sure to fit gaskets are in place.

*Keep the valve set clean.

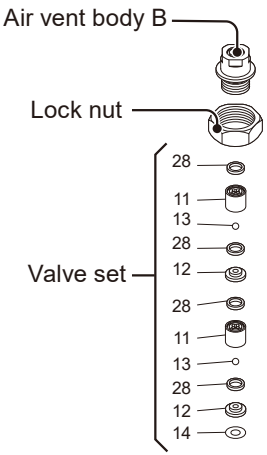

6 **Remount the air vent body A using the lock nut and connect the pipe and tube**

■ Suction valve set disassembly/assembly

NOTE

Be careful not to drop the valve set.

1 Remove the fitting nut and the suction tube

NOTE

Rinse chemicals or crystals off the parts as necessary.

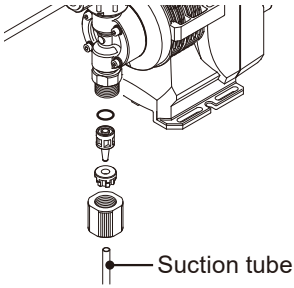

2 Remove the fitting

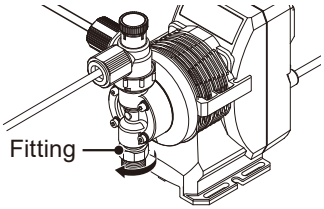

3 Pull out the valve set with a pair of tweezers

4 Build up the new valve set into the pump head and hand-tighten the air vent body B as far as it will go

Retighten it by a further 90° turn with an adjustable wrench.

*There are many small parts in the liquid end. These parts must be installed correctly for proper operation of the pump (no leak or good pump output). Be sure both valve seats are in the same orientation. See the exploded view pages, also.

*Be sure to fit O rings (except pumps with SH/FC wet ends) and gaskets in place.

*Keep the valve set clean.

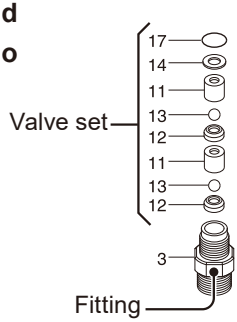

5 Reconnect the suction tube

■ Auto air vent valve set disassembly/assembly (Auto degassing type only)

Necessary tools

• Adjustable wrench • 27mm and 24mm spanners • A pair of tweezers

1 **Use an adjustable wrench or a 27 mm spanner to loosen the fitting nut and remove the air bleed tube**

*Be careful not to get wet with a residual chemical.

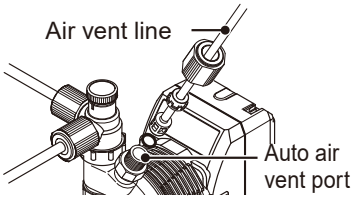

2 **Use an adjustable wrench or a 24 mm spanner to remove the fitting from the fitting adaptor**

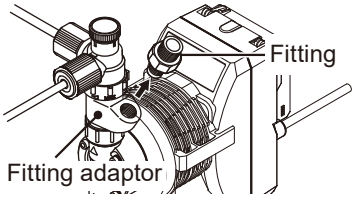

3 **Pull out the auto air vent valve with a pair of tweezers from the fitting adaptor**

4 **Remove the tape from the new auto air vent assy**

*Do not drop the auto air vent valve from the fitting.

5 **Hand-tighten the new auto air vent assembly into the fitting adaptor as far as it will go**

Retighten it by a further ¼ turn with an adjustable wrench or a 24 mm spanner.

*Arrange the auto air vent valve in the correct parts order and direction so the auto degassing works correctly. See page 67 for the correct order.

*Be sure to fit O rings in place.

*Keep the auto air vent valve clean.

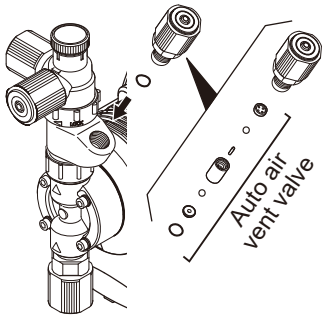

6 **Reconnect the air bleed tube**

*See the tube connection section on page 21 for detail.

Diaphragm replacement

Necessary tools

- 27 mm or wider adjustable wrench
- 3 mm or 4 mm hex wrench (depending on pump size)
- Torque wrench

NOTE

A few diaphragm spacers may be inserted between the retainer and the shaft for the adjustment of the diaphragm location. Note that the number of diaphragm spacers provided varies at different pumps.

1 **Run the pump to set the stroke length to 0% and stop afterward**

Shorten the stroke length to 0% or just to the length that the diaphragm can be removed.

2 **Loosen the fitting nuts and remove the suction tube, discharge tube, and air bleed tube**

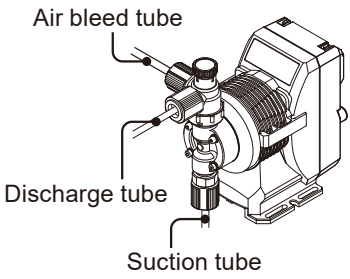

3 **Remove the pump head with the 3mm or 4mm hex wrench depending on the pump size**

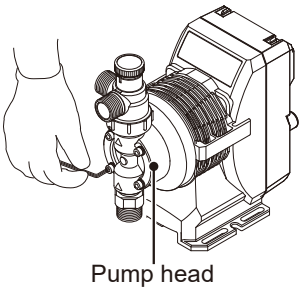

4 Unscrew the diaphragm from the shaft

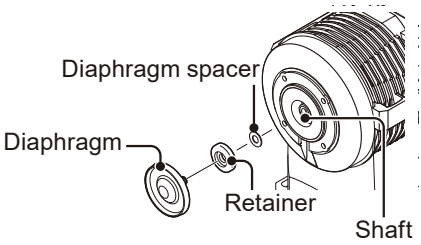

5 Slide the retainer and diaphragm spacer(s) onto the screw of the new diaphragm

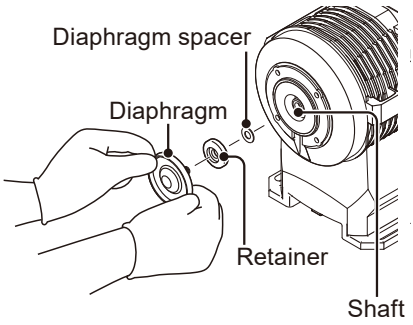

NOTE

- Fit the retainer with its round edge to the diaphragm.
- Try not to remove the separate bracket spacer during replacement. If removed inadvertently, catch the mating point with the bracket spacer and push that part into the bracket until it bottoms out.
- The EWP-E/-F types do not have the bracket spacer.

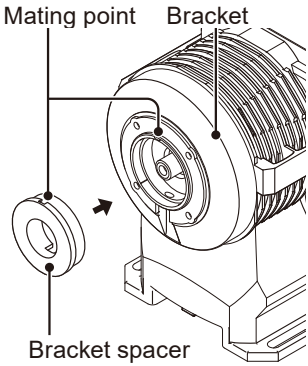

6 **Screw the new diaphragm into the shaft as far as it will go**

7 **Run the pump and set the stroke length to 100%**

Stop the pump afterward.

8 **Mount the pump head**

Tighten the head bolts diagonally and evenly by the specified torque at each model.

Tightening torque

Pump unit	Torque	Bolts
EWP-A/-B/-C/-D	2.16 N•m	M4 hex. socket head bolt
EWP-E	2.55 N•m	M4 hex. socket head bolt
EWP-E-V	2.16 N•m	M4 hex. socket head bolt
EWP-F	2.55 N•m	M5 hex. socket head bolt

*A hex wrench can be used for a torque wrench. See page 35.

9 **Reconnect the tubes**

Pump head, Drive unit & Control unit

Do not disassemble the pump beyond the description in this manual.

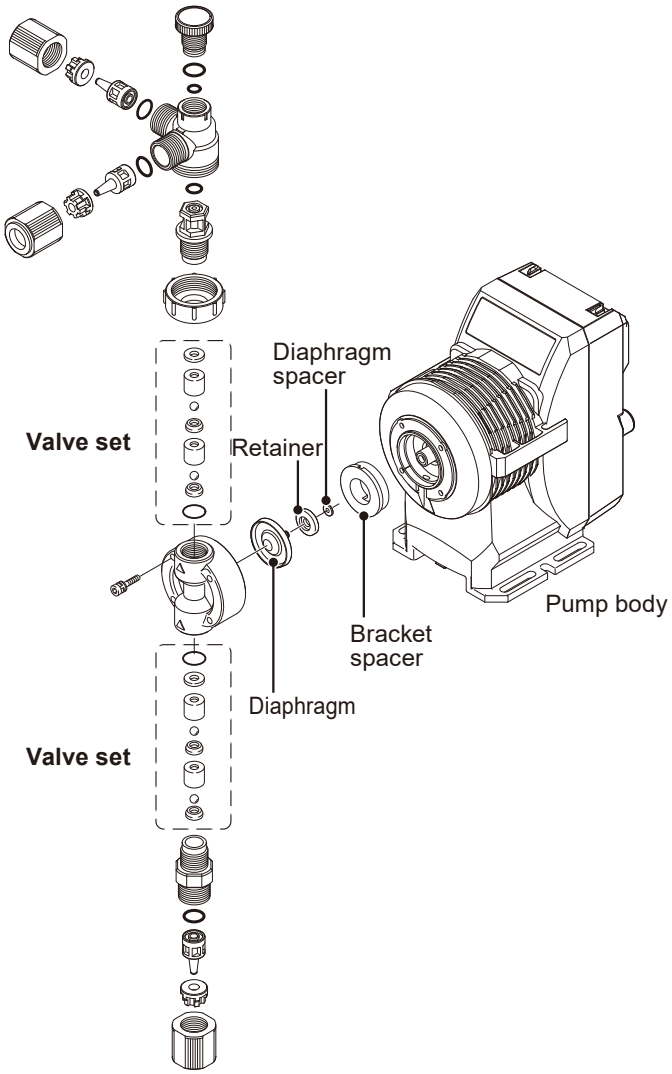

*Wet end materials and their sizes differ with models.
*The EWP-E/-F types do not have the bracket spacer.

Pump head

■ EWP-A/-B/-C/-D/-E/-F VC/VS/VE/PC/PS/PE/TC

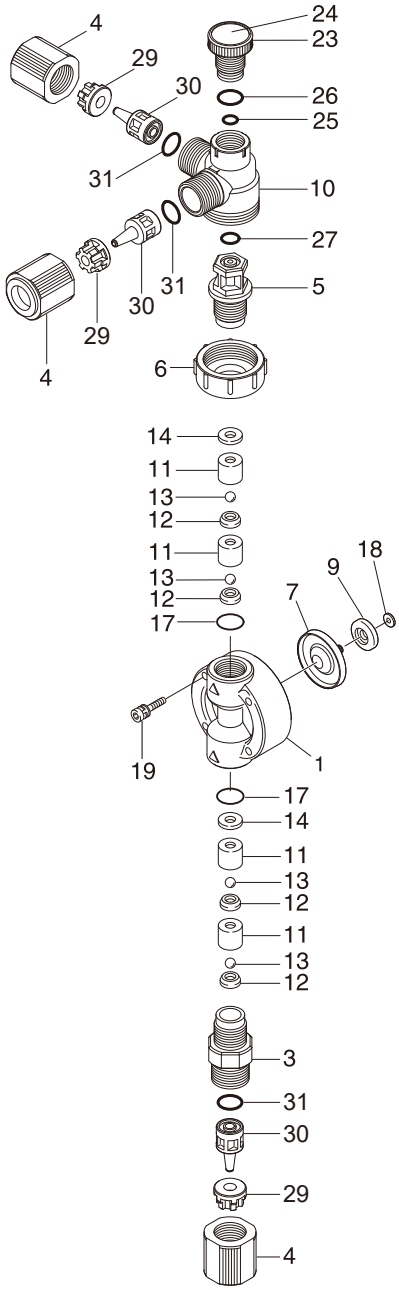

No.	Part names	# of parts
1	Pump head	1
3	Fitting	1
4	Fitting nut	3
5	Air vent body B	1
6	Lock nut	1
7	Diaphragm	1
9	Retainer	1
10	Air vent body A	1
11	Valve guide	4
12	Valve seat	4
13	Valve	4
14	Valve gasket	2
17	O ring	2
18	Diaphragm spacer	*
19	Hex. socket cap bolt [PW•SW]	4
23	Adjusting screw	1
24	Name plate	1
25	O ring	1
26	O ring	1
27	O ring	1
29	Hose stopper	3
30	Hose adaptor	3
31	O ring	3

*The number of diaphragm spacers varies with pump model.

■ EWP-B/-C/-D/-E/-F FC

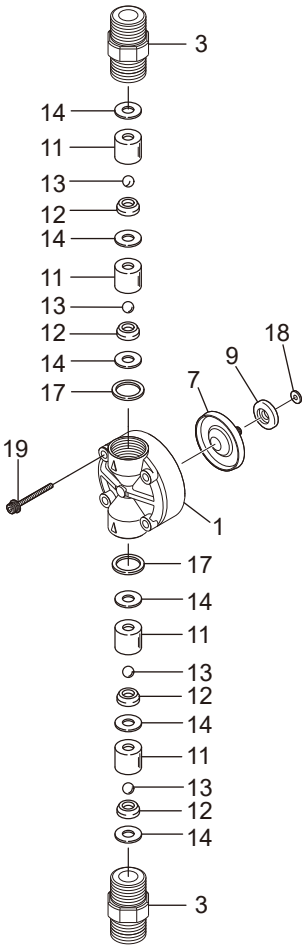

No.	Part names	# of parts
1	Pump head	1
3	Fitting	2
7	Diaphragm	1
9	Retainer	1
11	Valve guide	4
12	Valve seat	4
13	Valve	4
14	Valve gasket	6
17	Gasket	2
18	Diaphragm spacer	*
19	Hex. socket cap bolt [PW•SW]	4

*The number of diaphragm spacers varies with pump model.

■ **EWP-B/-C/-D/-E/-F SH**

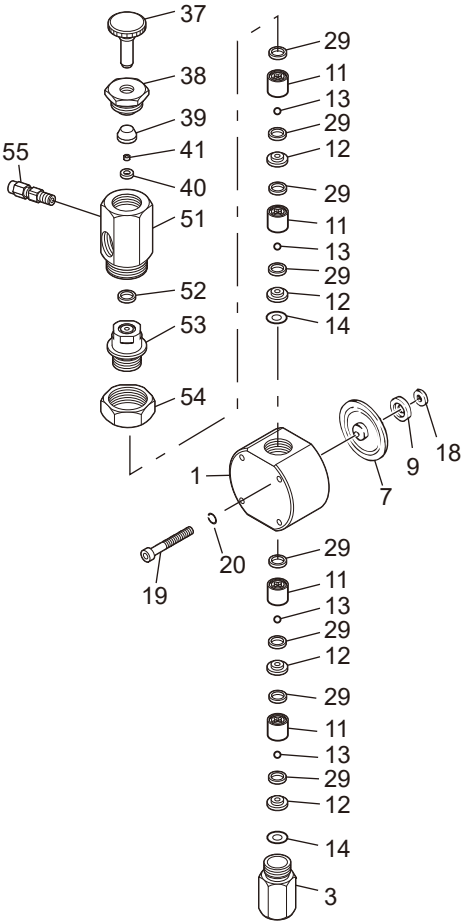

No.	Part names	# of parts
1	Pump head	1
3	Fitting	1
7	Diaphragm	1
9	Retainer	1
11	Valve guide	4
12	Valve seat	4
13	Valve	4
14	Valve gasket B	2
18	Diaphragm spacer	*
19	Hex. socket cap bolt	4
20	Spring washer	4
29	Valve gasket A	8
37	Adjusting screw	1
38	Seal nut	1
39	Seal ring	1
40	Seat	1
41	Seat ring	1
51	Air vent body A	1
52	Gasket	1
53	Air vent body B	1
54	Lock nut	1
55	Male connector	1

*The number of diaphragm spacers varies with pump model.

■ EWP-B PC/PS/PE -H

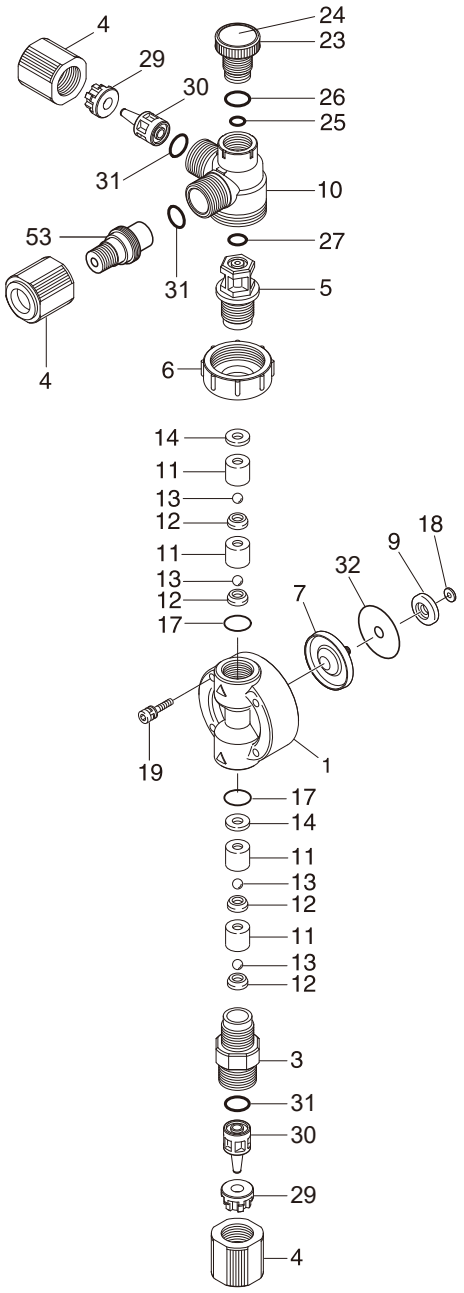

No.	Part names	# of parts
1	Pump head	1
3	Fitting	1
4	Fitting nut	3
5	Air vent body B	1
6	Lock nut	1
7	Diaphragm	1
9	Retainer	1
10	Air vent body A	1
11	Valve guide	4
12	Valve seat	4
13	Valve	4
14	Valve gasket	2
17	O ring	2
18	Diaphragm spacer	*
19	Hex. socket cap bolt [PW•SW]	4
23	Adjusting screw	1
24	Name plate	1
25	O ring	1
26	O ring	1
27	O ring	1
29	Hose stopper	2
30	Hose adaptor	2
31	O ring	3
32	Rear diaphragm sheet	1
53	Fitting adaptor	1

*The number of diaphragm spacers varies with pump model.

■ **EWP-B SH -H**

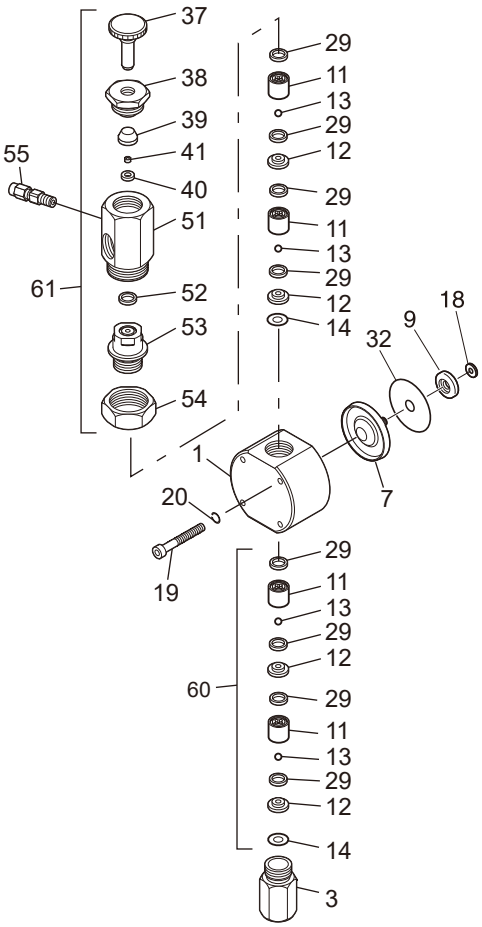

No.	Part names	# of parts
1	Pump head	1
3	Fitting	1
7	Diaphragm	1
9	Retainer	1
11	Valve guide	4
12	Valve seat	4
13	Valve	4
14	Valve gasket B	2
18	Diaphragm spacer	*
19	Hex. socket cap bolt	4
20	Spring washer	4
29	Valve gasket A	8
32	Rear diaphragm sheet	1
37	Adjusting screw	1
38	Seal nut	1
39	Seal ring	1
40	Seat	1
41	Seat ring	1
51	Air vent body A	1
52	Gasket	1
53	Air vent body B	1
54	Lock nut	1
55	Male connector	1

*The number of diaphragm spacers varies with pump model.

■ EWP-E PC/PS -V

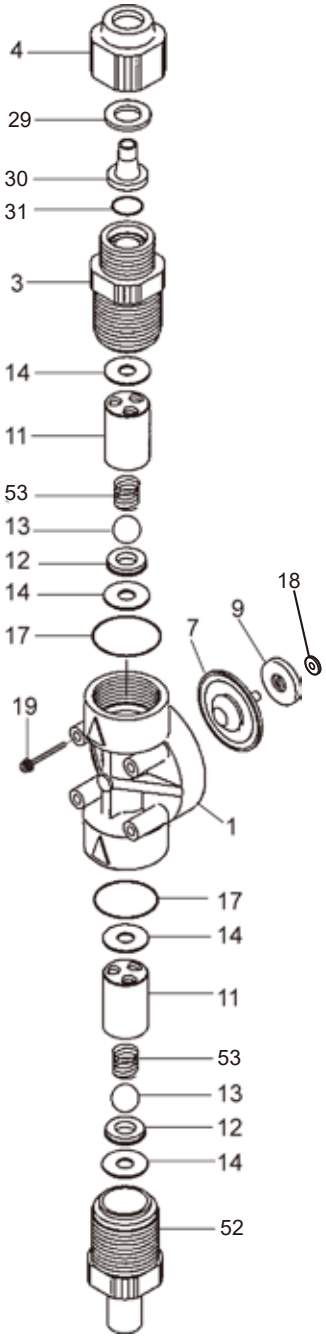

No.	Part names	# of parts
1	Pump head	1
3	Fitting	1
4	Fitting nut	1
7	Diaphragm	1
9	Retainer	1
11	Valve guide	2
12	Valve seat	2
13	Valve	2
14	Valve gasket	4
17	O ring	2
18	Diaphragm spacer	*
19	Hex. socket cap bolt [PW•SW]	4
29	Hose stopper	1
30	Hose adaptor	1
31	O ring	1
52	Suction fitting	1
53	Valve spring	2

*The number of diaphragm spacers varies with pump model.

■ EWP-B/-C/-D VC/VS -A

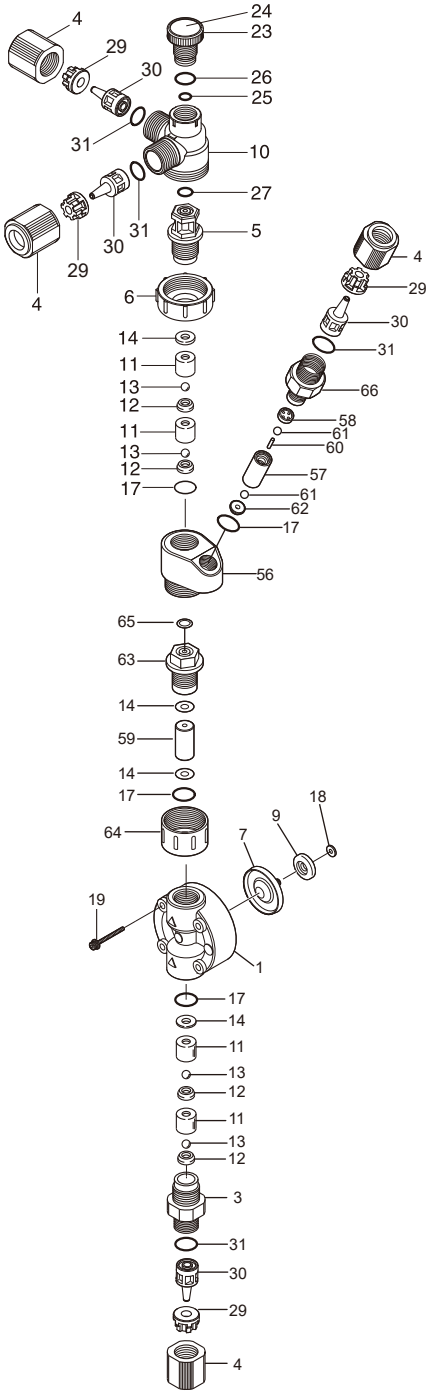

No.	Part names	# of parts
1	Pump head	1
3	Fitting	1
4	Fitting nut	4
5	Air vent body B	1
6	Lock nut	1
7	Diaphragm	1
9	Retainer	1
10	Air vent body A	1
11	Valve guide	4
12	Valve seat	4
13	Valve	4
14	Valve gasket	4
17	O ring	4
18	Diaphragm spacer	*
19	Hex. socket cap bolt [PW•SW]	4
23	Adjusting screw	1
24	Name plate	1
25	O ring	1
26	O ring	1
27	O ring	1
29	Hose stopper	4
30	Hose adapter	4
31	O ring	4
56	Fitting adapter	1
57	Air vent valve guide A	1
58	Air vent valve guide B	1
59	Spacer	1
60	Separate pin	1
61	Valve	2
62	Valve seat	1
63	Air vent body B	1
64	Lock nut	1
65	O ring	1
66	Air vent fitting	1

*The number of diaphragm spacers varies with pump model.

Specifications

Information in this section is subject to change without notice.

■ Pump unit

VC/VS/VE/PC/PS/PE/TC/FC/SH -N

Model code	Max. output capacity mL/min (L/h)	Max. rated discharge pressure MPa	Stroke length % (mm)	Stroke rate % (spm)	Average power cons. W	Average current A	Weight kg
EWP-019A	19 (1.14)	1.2	70-100 (0.7-1.0)	0-100 (0-360)	13	0.8	2.3*3
EWP-038B	38 (2.28)	1.0	50-100 (0.5-1.0)				
EWP-080C	80 (4.80)		40-100 (0.5-1.25)		23	1.1	
EWP-130D	130 (7.80)	0.7					
EWP-270E	270 (16.2)	0.35					
EWP-410F*1	410 (24.6)	0.2					
EWP-420F*2	420 (25.2)						

VC/VS/VE -C (High compression type)

Model code	Max. output capacity mL/min (L/h)	Max. rated discharge pressure MPa	Stroke length % (mm)	Stroke rate % (spm)	Average power cons. W	Average current A	Weight kg
EWP-023B	23 (1.38)	1.0	50-100 (0.625-1.25)	0.1-100 (1-180)	13	0.8	2.2
EWP-054C	54 (3.24)		40-100 (0.6-1.5)		23	1.1	
EWP-078D	78 (4.68)	0.7					

PC/PS/PE/SH -H (High pressure type)

Model code	Max. output capacity mL/min (L/h)	Max. rated discharge pressure MPa	Stroke length % (mm)	Stroke rate % (spm)	Average power cons. W	Average current A	Weight kg
EWP-038B	38 (2.28)	2.0	50-100 (0.5-1.0)	0.1-100.0 (1-360)	23	1.1	2.2*4

PC/PS -V (High viscosity type)

Model code	Max. output capacity mL/min (L/h)	Max. rated discharge pressure MPa	Stroke length % (mm)	Stroke rate % (spm)	Average power cons. W	Average current A	Weight kg
EWP-150E	150 (9.00)	0.5	40-100 (0.5-1.25)	0.1-100.0 (1-240)	23	1.1	2.6

VC/VS -A (Auto degassing type)

Model code	Max. output capacity mL/min (L/h)	Max. rated discharge pressure MPa	Stroke length % (mm)	Stroke rate % (spm)	Average power cons. W	Average current A	Weight kg
EWP-030B	30 (1.80)	1.0	50-100 (0.5-1.0)	0.1-100.0 (1-360)	13	0.8	2.7
EWP-064C	64 (3.84)		40-100 (0.5-1.25)		23	1.1	
EWP-110D	110 (6.60)	0.7					

*Maximum output capacity is rated with clean water at ambient temperature at maximum discharge pressure (also, stroke length 100%, at 360spm and rated voltage). Output may increase as pressure decreases.

*Allowable room temperature: 0-40°C

*Allowable liquid temperature: 0-40°C for the pumps with VC/VS/VE wet ends (0-60°C for the PC/PS/PE/TC/FC/SH wet ends)

*Allowable ambient humidity: 30-90%RH (non-condensing)

*Allowable power voltage deviation: ±10% of the rated voltage

*Maximum altitude: 2000 m

*Pollution degree: 2

*Maximum noise level: 70 dB at 1 m (A scale)

*1 The EWP-410F with the TC/FC/SH wet ends

*2 The EWP-420F with the VC/VS/VE/PC/PS/PE wet ends

*3 The EWP with the SH wet end is 3.6 kg.

*4 The EWP with the SH-H wet end is 3.0 kg.

■ Control unit

Control modes	MAN (Manual)	0-100%
	ANA	4-20 mA in proportion to 0-100%
	PLS.V	0-6Hz in synchronous with 0-100%
Front panel	ON LED	Blinks green synchronously with strokes when the pump is running.
	STOP LED	Lights red when the STOP signal is input.
Control functions	STOP	Pump stops when the STOP signal is input.*1
Input	STOP	Dry contact or Open collector*1
	Analog	0-20 mADC (input resistance 220Ω)
	Pulse	Dry contact or Open collector*1, UP to 6 Hz (with the pulse ON time 5 msec or longer)
Power voltage	100-240VAC*2	

*1 The maximum applied voltage to the contact is 5 VDC at 1.0 mA. The minimum application load of the relay or switch should be 1 mA or below.

*2 Observe the allowable power voltage range of 90-264 VAC. Or failure may result.

■ European power cable

Wire size (Cross section area)	0.75 [mm^2] 3-conductor cable (L/N/E)
Length	2000 [mm]
Cable type/standard	H05VV-F
Terminal end	CEE 7/7 plug

■ Australian power cable

Wire size (Cross section area)	1.0 [mm^2] 3-conductor cable (L/N/E)
Length	2000 [mm]
Cable type/standard	H05VV-F
Terminal end	AS/NZ 3112 plug

■ Asian power cable

Wire size (Cross section area)	0.75 [mm^2] 3-conductor cable (L/N/E)
Length	2000 [mm]
Cable type/standard	H05VV-F
Terminal end	Spade terminals (V1.25-YS4A or equivalent)
	Stripped earth wire

■ Pump color

Blue	Munsell color system 7.5PB 3/8

Outer dimensions

■ EWP-019A/-038B/-080C/-130D/-270E/-410F/-420F VC/VS/VE/PC/PS/PE/TC

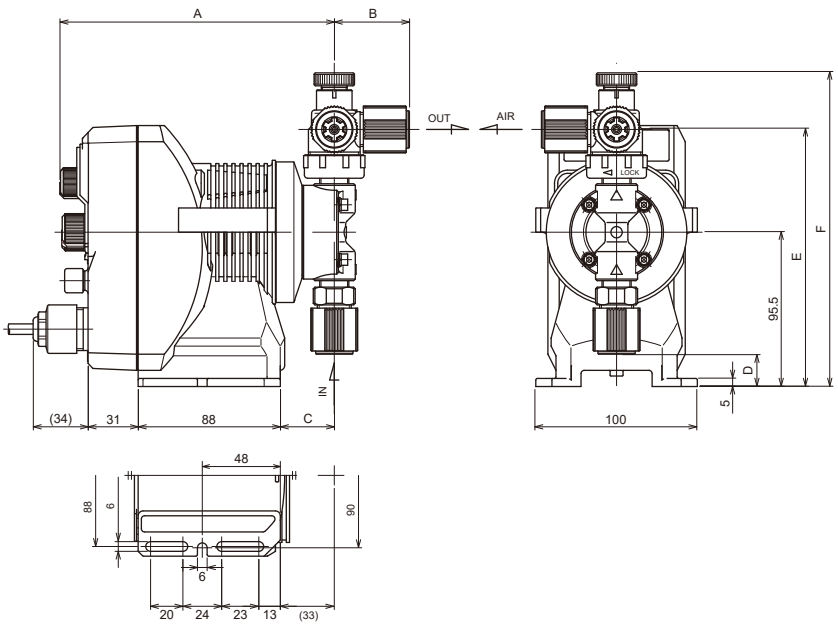

Dimensions in millimetre

Pump unit	A	B	C	D	E	F
019A	170	47	33	20	159	194
038B						
080C						
130D						
270E	172		35	6	172	207
410F/420F					171	206

*The pump with the 09/10 tube-size code has the different dimension C and E. Contact us for more information.

■ EWP-038B/-080C/-130D/-270E/-410F FC

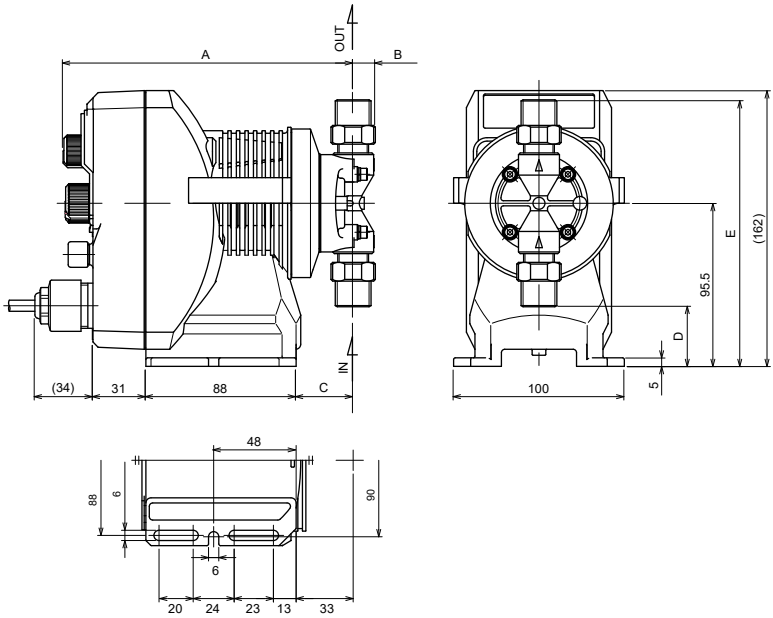

Dimensions in millimetre

Pump unit	A	B	C	D	E
038B	170	13	33	35	156
080C					
130D					
270E	172	16	35	19	173
410F					

■ EWP-038B/-080C/-130D/-270E/-410F SH

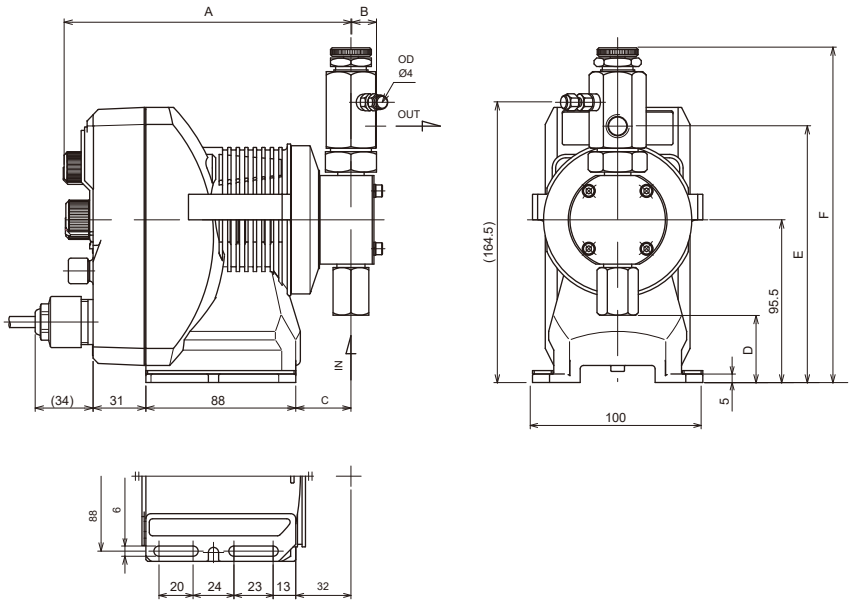

Dimensions in millimetre

Pump unit	A	B	C	D	E	F
038B	169	15	32	40	151	197
080C						
130D						
270E	171		34	30	163	209
410F				27	165	211

■ EWP-023B/-054C/-078D VC/VS/VE -C

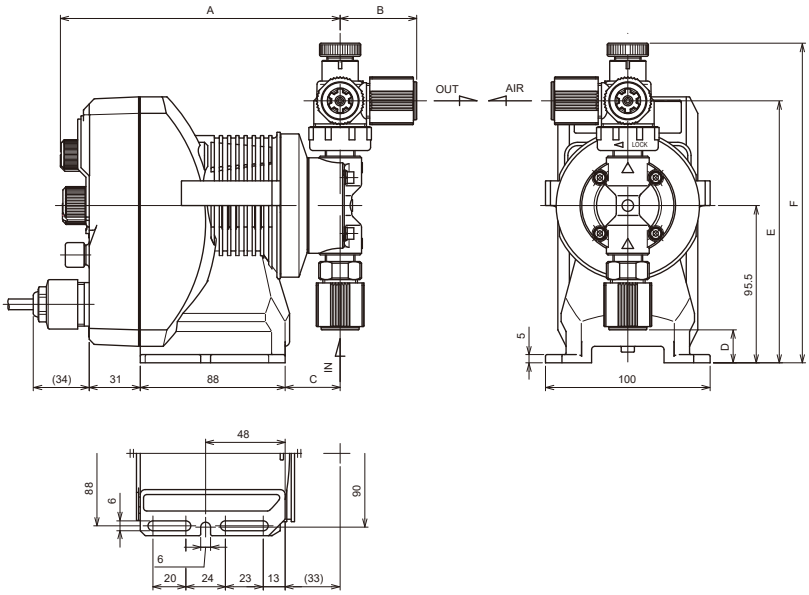

Dimensions in millimetre

Pump unit	A	B	C	D	E	F
023B	170	47	33	21	159	194
054C						
078D						

*The pump with the 09/10 tube-size code has the different dimension C and E. Contact us for more information.

■ EWP-038B PC/PS/PE -H

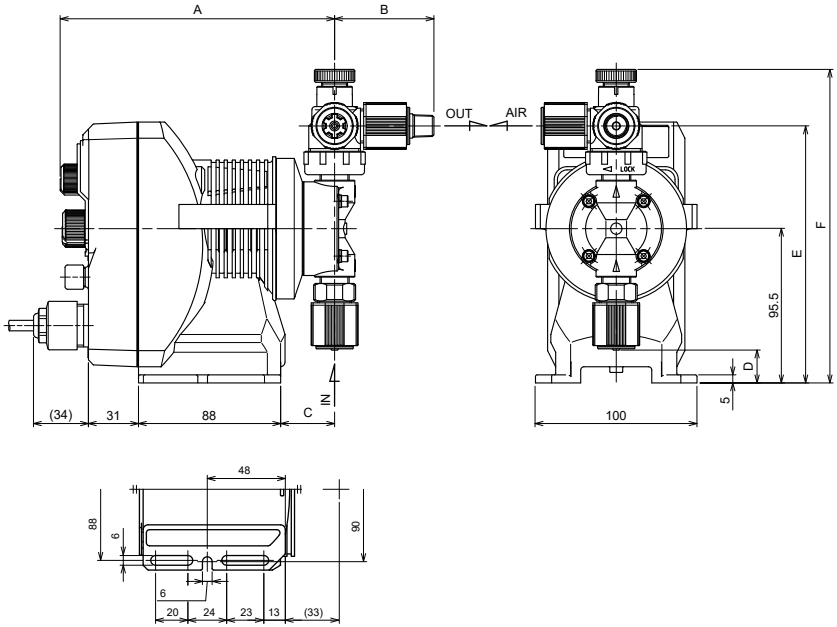

Dimensions in millimetre

Pump unit	A	B	C	D	E	F
038B	170	62	33	21	159	194

*The pump with the 09/10 tube-size code has the different dimension C and E. Contact us for more information.

■ EWP-038B SH -H

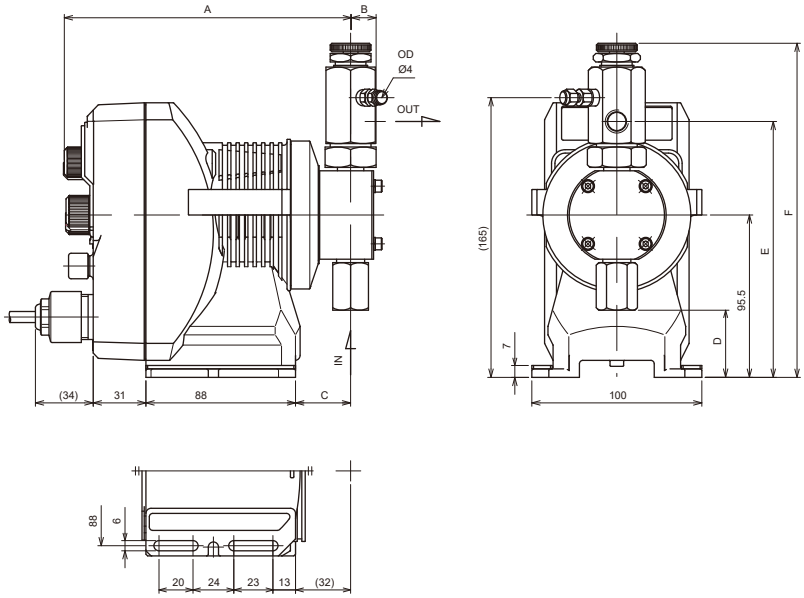

Dimensions in millimetre

Pump unit	A	B	C	D	E	F
038B	169	15	32	40	151	197

■ EWP-150E PC/PS -V

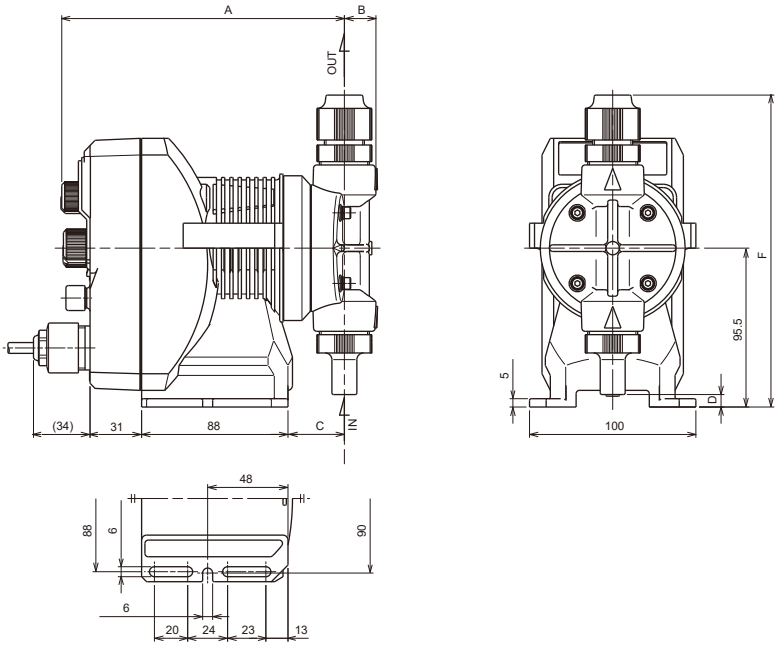

Dimensions in millimetre

Pump unit	A	B	C	D	F
150E	170	20	34	8	188

■ EWP-030B/064C/110D VC/VS -A

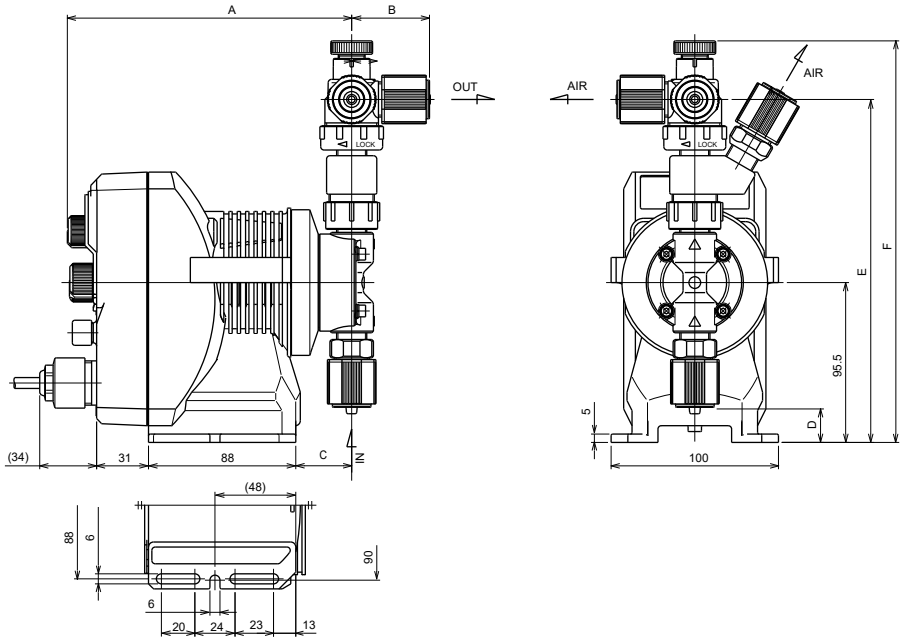

Dimensions in millimetre

Pump unit	A	B	C	D	E	F
030B	170	47	33	20	205	240
064C						
110D						

EC DECLARATION OF CONFORMITY

A copy of the original Declaration of Conformity

(SUPPLIER'S NAME)

WE

IWAKI CO.,LTD.

(ADDRESS)

6-6 2-CHOME KANDA-SUDACHO CHIYODA-KU TOKYO JAPAN

(PRODUCT)

DECLARE UNDER OUR SOLE RESPONSIBILITY THAT THE PRODUCTS

ELECTROMAGNETIC METERING PUMP

(MODEL NAME)

EWP SERIES

TO WHICH THIS DECLARATION RELATES ARE IN CONFORMITY WITH THE FOLLOWING STANDARDS OR DIRECTIVES AS FAR AS APPLICABLE

(DIRECTIVES)

MACHINERY DIRECTIVE 2006/42/EC (ANNEX IIA)
EMC DIRECTIVE 2014/30/EU
RoHS DIRECTIVE 2011/65/EU

(STANDARDS)

EN ISO12100:2010 EN61000-6-2:2005 EN IEC63000:2018
EN809:1998+A1:2009 EN61000-6-4:2007+A1:2011

(A PERSON WHO IS AUTHORISED TO COMPILE THE TECHNICAL FILE IN THE COMMUNITY)

IWAKI EUROPE GMBH
SIEMENSRING 115 D-47877 WILLICH GERMANY

NOTE: THIS DECLARATION BECOMES INVALID IF TECHNICAL OR OPERATIONAL MODIFICATIONS ARE INTRODUCED WITHOUT THE MANUFACTURER'S CONSENT.

柳原利典

TOSHINORI YANAGIHARA
EXECUTIVE OFFICER SENIOR GENERAL MANAGER,
ENGINEERING HEAD OFFICE

Tokyo, Aug. 30, 2024

(PLACE AND DATE OF ISSUE) **(NAME AND SIGNATURE OR EQUIVALENT MARKING OF AUTHORIZED PERSON)**

DOCUMENT NO. IS-51K-621

UK DECLARATION OF CONFORMITY

A copy of the original Declaration of Conformity

(SUPPLIER'S NAME)

WE

IWAKI CO.,LTD.

(ADDRESS)

6-6 2-CHOME KANDA-SUDACHO CHIYODA-KU TOKYO JAPAN

(PRODUCT)

DECLARE UNDER OUR SOLE RESPONSIBILITY THAT THE PRODUCTS

ELECTROMAGNETIC METERING PUMP

(MODEL NAME)

EWP SERIES

TO WHICH THIS DECLARATION RELATES ARE IN CONFORMITY WITH THE FOLLOWING REGULATIONS OR STANDARDS AS FAR AS APPLICABLE

(REGULATIONS)

S.I. 2008/1597 SUPPLY OF MACHINERY (SAFETY)
S.I. 2016/1091 ELECTROMAGNETIC COMPATIBILITY
S.I. 2012/3032 RESTRICTION OF HAZARDOUS SUBSTANCES

(STANDARDS)

EN ISO12100:2010 EN61000-6-2:2005 EN IEC63000:2018
EN809:1998+A1:2009 EN61000-6-4:2007+A1:2011

(A PERSON WHO IS AUTHORISED TO COMPILE THE TECHNICAL FILE IN THE GB MARKET)

SENSYS LIMITED
UNIT 9 POND CLOSE WALKERN ROAD
STEVENAGE HERTS SG1 3QP UK

NOTE: THIS DECLARATION BECOMES INVALID IF TECHNICAL OR OPERATIONAL MODIFICATIONS ARE INTRODUCED WITHOUT THE MANUFACTURER'S CONSENT.



TOSHINORI YANAGIHARA
EXECUTIVE OFFICER SENIOR GENERAL MANAGER,
ENGINEERING HEAD OFFICE

Tokyo, Aug. 30, 2024

(PLACE AND DATE OF ISSUE) **(NAME AND SIGNATURE OR EQUIVALENT MARKING OF AUTHORIZED PERSON)**

DOCUMENT NO. IS-51K-622

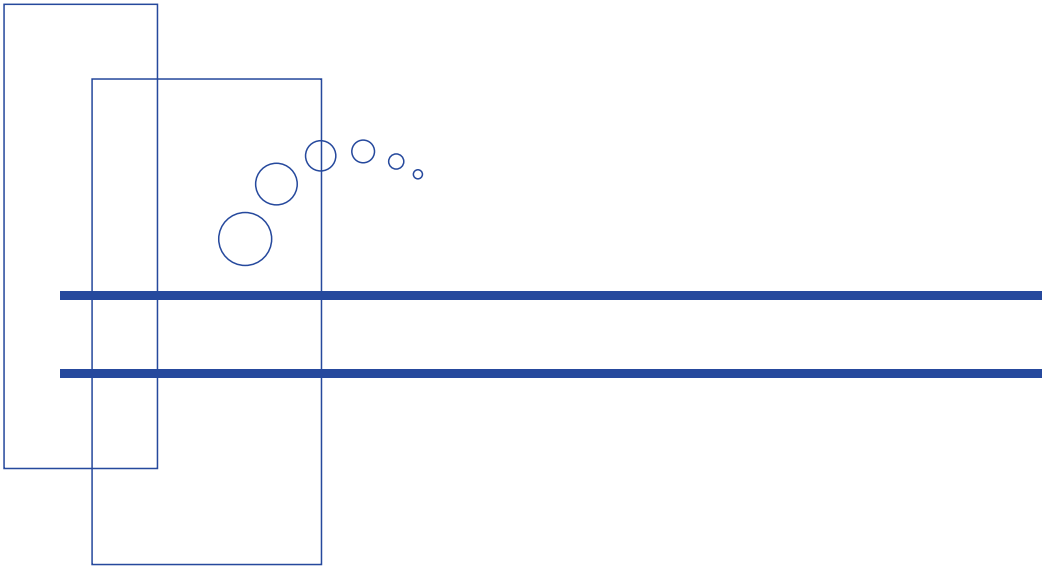

https://www.iwakipumps.jp

IWAKI CO.,LTD. 6-6 Kanda-Sudacho 2-chome Chiyoda-ku Tokyo 101-8558 Japan
TEL: +81 3 3254 2935 FAX: +81 3 3252 8892

European Headquarter / IWAKI Europe GmbH
TEL: +49 2154 9254 0 FAX: +49 2154 9254 48

Germany / IWAKI Europe GmbH
TEL: +49 2154 9254 50 FAX: +49 2154 9254 55

The Netherlands / IWAKI Europe GmbH (Netherlands Branch)
TEL: +31 74 2420011 FAX: +49 2154 9254 48

Italy / IWAKI Europe GmbH (Italy Branch)
TEL: +39 0445 561219 FAX: +39 0445 569088

Spain / IWAKI Europe GmbH (Spain Branch)
TEL/FAX: +34 934 741 638

Poland / IWAKI Europe GmbH (East Europe Branch)
TEL: +48 12 347 0755 FAX: +48 12 347 0900

Denmark / IWAKI Nordic A/S
TEL: +45 48 242345

Finland / IWAKI Suomi Oy
TEL: +358 10 201 0490

Norway / IWAKI Norge AS
TEL: +47 23 38 49 00

Sweden / IWAKI Sverige AB
TEL: +46 8 511 72900

Belgium / IWAKI Belgium N.V.
TEL: +32 13 670200 FAX: +32 13 672030

France / IWAKI France S.A.
TEL: +33 1 69 63 33 70 FAX: +33 1 64 49 92 73

U.S.A. / IWAKI America Inc.
TEL: +1 508 429 1440 FAX: +1 508 429 1386

Brazil / IWAKI Do Brasil Comercio De Bombas Hidraulicas LTDA.
TEL/FAX: +55 19 3244 5900

China (Shanghai) / IWAKI Pumps (Shanghai) Co., Ltd.
TEL: +86 21 6272 7502 FAX: +86 21 6272 6929

China (Hong Kong) / IWAKI Pumps Co., Ltd.
TEL: +852 2607 1168 FAX: +852 2607 1000

China (Guangzhou) / GFTZ IWAKI Engineering & Trading Co., Ltd.
TEL: +86 20 84350603 FAX: +86 20 84359181

China (Shenzhen) / IWAKI Pumps (Shenzhen) Co., Ltd.
TEL: +86 0755 8656 3696

Singapore / IWAKI Singapore Pte Ltd.
TEL: +65 6316 2028 FAX: +65 6316 3221

Indonesia / IWAKI Singapore Pte Ltd. (Indonesia Office)
TEL: +62 21 6906606 FAX: +62 21 6906612

Malaysia / IWAKIm SDN. BHD.
TEL: +60 3 7803 8807 FAX: +60 3 7803 4800

Korea / IWAKI Korea Co., Ltd.
TEL: +82 2 6238 4800 FAX: +82 2 6238 4801

Taiwan / IWAKI Pumps Taiwan Co., Ltd.
TEL: +886 2 8227 6900 FAX: +886 2 8227 6818

Thailand / IWAKI (Thailand) Co., Ltd.
TEL: +66 2 322 2471 FAX: +66 2 322 2477

Australia / IWAKI Pumps Australia Pty Ltd.
TEL: +61 2 9899 2411 FAX: +61 2 9899 2421

T1225-5 '26/09