Manual No.MPMPO01C(E)/2301ATEX
Original Instruction
I.E. EDITION

STAINLESS STEEL MAGNET DRIVE PUMP

MAGPAC SERIES

MP/MH/ML

MPO/MHO/MLO

INSTRUCTION MANUAL

Requirements

This instruction manual is for the person who actually operates the pump. Please be sure this manual is provided to and understood by the operator on the scene. If the instruction manual is also needed by personnel who install the pump or by a staff of a plant constructor, please let us know. We will supply another copy.

Machine Number	Code	Lot Number

To the on-site operator: please enter the pump's code and lot number above and for future parts order and inquiry.

SANWA HYDROTECH CORPORATION

Introduction

Thank you very much for selecting a Sanwa Magnet Drive Pump. Our pumps are manufactured under strict quality control standards to ensure that your pump is in perfect operating condition. Improper handling or operation could however inhibit the pump's performance or lead to accidents. To use your Sanwa Magnet Drive Pump in the manner for which it was designed, be sure to closely follow the instructions contained herein. The instruction manual should be kept in a safe place where it can be referred to whenever necessary.
For information concerning handling and operation of the motor, refer to the instruction manual for the motor.

Safety

- Sanwa Hydrotech does not assume responsibility for damage or injury resulting from failure to follow the safety instructions contained herein. Be sure therefore to follow the instructions for safe and correct usage when operating, performing maintenance, or inspecting the pump.
- The degree of potential danger as a result of improper handling or operation is indicated by the following three classifications:

⚠ DANGER

Situation where improper handling or operation would almost certainly result in death or serious bodily injury.

⚠ WARNING

Situation where improper handling or operation could result in death or serious bodily injury.

⚠ ATTENTION

Situation where improper handling or operation could result in bodily injury or equipment damage.



WARNING



WARNING

Situation where even normal handling or operation could result in bodily injury by hot or cold liquid.

⟨Ex⟩ WARNING

Situation where improper handling or operation in hazardous location could result ignition or explosion.

- Items indicated by ⚠ATTENTION could also lead to serious consequences according to the circumstances. Be sure therefore to strictly observe items indicated by any of these labels.

⚠ DANGER

General

- Do not use the pump in the presence of explosive gas or powder. You may cause an injury or start a fire.
- Do not use the pump to pumping a liquid with a low flash point or ignition temperature.
- Be sure to turn the power off before performing any type of maintenance, repair or inspection. Failure to do so could result in electrical shock.
- Use the material which is suitable to specification of liquid. Otherwise leakage occurs.

Operation

- Absolutely do not touch or come close to turning parts. Doing so could result in injury caused by entanglement in the rotating parts.
- In case of power failure, be sure to turn the power off to prevent the pump from starting unexpectedly when the power is restored.

Maintenance and Inspection

- Be sure to connect the power cable in accordance with instruction manual for the motor and the connection diagram in the terminal box. Failure to do so could result in electrical shock or fire.
- Magnet drives cause strong magnetic fields. Persons with a pacemaker should not stay close to the magnet drive or come into close bodily contact with parts of it.

⚠ WARNING

General

- If using in connection with the food processing, be sure to keep the pump clean by washing. Failure to do so could enable germs to develop in the pump.
- Do not insert your fingers or any other objects in the openings of the pump motor. Doing so could result in electrical shock, injury or fire.

Installation and Adjustment

- Absolutely do not place inflammable materials in the area surrounding the pump. Doing so could result in fire.

Operation

- Be careful of rotating parts.
  Do not insert your fingers, etc., in the openings of the frame adaptor while the pump is operating. Touching turning parts could result in injury.

Disassembly and Assembly

- Be careful with hazardous liquids.
  If pumping dangerous chemicals, be sure to drain and wash well before disassembling. A small amount of fluid may however remain in the screw, faucet joint and engaged parts inside the pump.
  If handling hazardous chemicals, be sure to wear protective equipment such as glasses and rubber gloves, and proceed with caution while disassembling the pump.
- Be careful not to get your hands or fingers pinched by machine parts.
  Parts may be strongly attracted by magnetism when disassembling or assembling the magnet coupling. Be careful not to let your hands or fingers get pinched by magnetized parts.

⚠ ATTENTION

General

- Transport, installation, piping and wiring connections, operation, adjustment, maintenance and inspection should be carried out by qualified personnel. Having unqualified personnel perform these tasks could result in electrical shock, injury or fire.
- Be sure to use only a power source of the voltage indicated on the name plate of the motor. Not doing so could result in electrical shock, injury or equipment damage.
- Do not use a damaged motor. Doing so could result in injury or fire.
- The customer should not modify the pump under any circumstances. Doing so could result in an unexpected accident. Sanwa Hydrotech shall not be responsible for accidents or damage resulting from equipment modified by the customer.
- Do not block name plate or warning labels from view.
- Do not remove the name plate or warning labels.

Transport

- Beware of equipment falling or turning over during transport. Be sure to use the hanger bolt if the pump is equipped with one. After installation, however, you should avoid hoisting the entire machine by the hanger bolt. Before lifting, check the weight of the pump by referring to the catalog, etc. Do not lift a pump which exceeds the rated weight of the hoist. Doing so could result in injury or equipment damage caused by bolt damage, falling or turning over.
- The pump bearing is made of extremely rigid material, and cannot endure rigorous vibration. The pump should be handled with care during transport. The pump should also be handled with care when installing.

Unpacking

- Check the top and bottom of the package before unpacking. Failure to do so could result in injury.
- Check the delivery specifications and name plate to make sure the merchandise is as ordered. Installing the wrong equipment could result in injury or equipment damage.

⚠ ATTENTION

Piping and Wiring

- Be sure to connect the power cable in accordance with instruction manual for the motor and the connection diagram in the terminal box. Failure to do so could result in electrical shock or fire.
- Do not forcibly bend, pull or crimp the power cable or motor lead wires. Doing so could result in electrical shock.

Installation and Adjustment

- Be sure to connect the earth terminal securely. Failure to do so could result in electrical shock.

Operation

- Do not operate with the terminal box cover off. After wiring, be sure to replace the terminal box cover in its original position. Failure to do so could result in electrical shock.
- Beware of high temperatures.
  If handling high temperature fluids, do not place your hands, etc., near the casing or frame adapter. Doing so could result in skin burning.
- Do not operate the pump to pumping gases. This pump is designed to pumping liquids. Otherwise, the pump may have a high temperature or SiC bearings and the rear casing shell may be broken.
- No-Load Operation ⃠
  Absolutely do not operate the pump without a load. Doing so will cause the inside to heat up and damage the bearings. Never operate the pump without liquid inside of the pump. (This applies to when checking rotation direction as well.) If heat is produced in the can, the temperature rises may cause magnetism to reduce.
- Shut-Off Operation ⃠
  Do not perform shut-off operation for more than one minute. Doing so will cause a radical rise in temperature of the liquid in the pump, and could result in an accident.

WARNING WARNING

- If the temperature of pumping liquid is very low, the casing, the rear casing and the frame adapter would be very cold. So do not touch them. Otherwise person will suffer an injury in a body.
- If the temperature of pumping liquid is very high, the casing, the rear casing and the frame adapter would be very hot. So do not touch them. Otherwise person will suffer an injury in a body.
- Do not cover the frame adapter of “MH” and “MHO” type, even for safety. This part has the fins and the holes for radiating. If it is covered, temperature of the pump or motor will be rise up. If it is necessary to insulate the pump’s high temperature, cover only the casing of the pump.

WARNING

General

- The magnetic pump is designed for liquid only.
- If the pump is modified or changed without authority and/or other than original spare parts are used for repair works, the explosion protection will be forfeited.

Inadmissible mode of operation

- Driving motor must have approval for the use in areas subject to explosion hazards.

Temperature limits

- When being operated to its designated use, the pump’s maximum surface temperature must not exceed the temperature category of the explosion protection zone.

Speed limits

- The maximum allowable speed is 3600rpm. If the pump is operated a speed exceeding the maximum speed, explosion protection is no longer granted.
- Prior to operating the pump unit with a frequency converter it must be checked, whether the driving motor is appropriate for that purpose.

Disassembly and Assembly

- Ensure that the driving motor and/or the entire equipment have been approved for the prevailing explosion protection zone.
- Instruction given in the operation manuals of the driving motor is to be observed.
- If the pump is fitted with a heating jacket, the temperature of heating medium must not exceed the maximum allowable surface temperature of the pump.

Operation

- When a pump is operated which has not been completely filled, an ignition source can develop due to heat input. The pump must be completely filled. If cannot ensure that, appropriate monitoring must be taken.
- When the pump is operated in the closed circuit system, the temperature of liquid and the surface of the pump will be increased. Use the monitor to prevent the pump from excessively heating up.
- The situations below will increase the temperature of the pump surface. Do not operate the pump these situations.
  - ·Shut-off operating ·Low-flow operating ·Dry running
  - ·Operating with "decoupling"
  - ·Operating with "circulation-hole of casing cover and shaft is interrupted"

Maintenance

- If the clearance between rotating and stationary components is out of limitation, it may happen that these component contact and resulting frictional heat entail excessive temperatures.
- Ensure that the bypass-hole of casing cover and shaft is not interrupted.
- Ensure whether pump parts are not corroded. If corrosion occurred, examine the change of material. Give priority to experience on selection of material.

To Prevent sparks

- To avoid the potential hazards from random induced current generating a spark, the earth contact on the pump and motor must be used.
- To avoid electrostatic charge, do not rub non-metallic surfaces with a dry cloth. Make sure the cloth is damp.

Contents

Introduction for safety

● **Instructions for Safe Usage 10**
Equipment Failure / Accident Prevention and Safe Operation Checks..... 10
Precautions When Pumping Special Liquids..... 11

● **Transport and unpacking 12**
1. Transport..... 12
2. Unpacking..... 12

● **Preliminary Check..... 13**

● **Pump model identification 14**
1. Liquid Temperature Selection Range..... 14
2. Impeller Type 14
3. Pump Size 14

● **Type (Pump Code)..... 16**

● **Pump Specification..... 18**
1. Design Pressure 18
2. Casing Piping Connection 18
3. Viscosity..... 18
4. Magnet Coupling..... 19
5. Motor..... 19
6. Parts Specifications of Each Liquid Temperature Range..... 19
7. Ambient Temperature..... 20
8. Speed Limit..... 20
9. Maximum and Minimum Flow Rate 20
10. Temperature Classification 20
11. Marking 20

● **Declaration of Conformity 22**

● **Pump Installation 34**

1. Installation..... 34
2. Piping..... 34
3. Wiring..... 35
4. Earthing 36
5. Cover 36

● **Operation 37**

1. Pre-Operation Inspections (Be sure to turn the power off before performing inspections!)..... 37
2. Operation 37

Operation and handling..... 38

3. Shutting Down 42

● **Maintenance and Inspection 44**

1. Routine Inspection 44
2. Configuration and Location of Part 45

Parts 45

Configuration 46

3. Order of Disassembly and Assembly..... 48
4. Checking parts dimension and clearance gap..... 59
5. Optimal Tightening Torque for Bolts and Nuts 61

● **Troubleshooting 63**

● **Repairs and Warranty 65**

● Instructions for Safe Usage

- In order to use your Sanwa Magnet Drive Pump in the manner for which it was designed, be sure to read through and get a thorough understanding of the contents of this manual and the installation instructions before attempting to install, operate, perform maintenance or inspections. You should also have a good understanding of the equipment itself, matters concerning safe operation and handling, and other matters requiring attention before attempting to use the pump.

Equipment Failure / Accident Prevention and Safe Operation Checks

- Pre-Operation Checks
  The power source, wiring and connection, piping, priming, air purging and rotation direction should be checked before starting operation.

- Checks for Test Operation and Actual Operation
  Current, voltage, suction pressure, discharge pressure, and discharge flow rate should be checked when starting test or actual operation. The pump should also be checked for vibration, abnormal noise and leaks when operation is started.

⚠ DANGER

- **Be sure to take special precautions when performing test operation checks if using hazardous, explosive or inflammable liquids.**

Precautions When Pumping Special Liquids

- Sanwa pumps are used in various industries. Our stainless steel magnet drive pumps in particular are frequently used for pumping hazardous, explosive or inflammable liquids, and fluids which tend to produce food germs. Mishandling in any of these cases could lead to serious consequences such as bodily injury, loss of life or property damage. To prevent these from occurring, you should get a thorough understanding of the information contained herein and use the pump in the manner for which it was designed.

⚠ DANGER

- **Special care and safety equipment are required for the following types of liquid:**
  - **Liquids which could produce a chemical reaction**
  - **Liquids which could produce germs in connection with food products, and liquids which are of a dangerous nature**
  - **Liquids which could directly harm the human body**

- Preventative measures should be taken to protect special pumps and pumps used in the main production line from natural disasters, unexpected accidents or equipment failure, the event of which could have a disastrous effect on your production. If these are impossible, you should keep a spare pump on hand for emergency use. (A pump with a suitable motor unit will be better.)

● Transport and unpacking

1. Transport

⚠ ATTENTION

- **When transporting the pump, be careful not to drop it or let it fall. Take the appropriate method, such as picking up by two people or lifting by belt, to avoid risk.**
- **Make sure the eyebolts (if the pump is equipped with them) are used to secure the pump during transportation. However, do not use the pump's eyebolts to lift a machine after the pump is mounted on it. In case of no the eyebolt, sling around the pump frame adapter and the motor. Before suspending the pump, refer to leaflet or drawings to check the weight of the pump and the motor. Never lift a pump that exceeds the rated load of your suspension device. If you fail to heed this advice, the eyebolts may be distorted, and the pump may drop or fall, and this may cause an injury or damage the pump.**
- **The pump bearing is made of extremely rigid material, and cannot endure rigorous vibration. The pump should be handled with care during transport. The pump should also be handled with care when installing.**

2. Unpacking

⚠ ATTENTION

- **Check the top and bottom of the package before unpacking. Failure to do so could result in injury.**
- **Check the delivery specifications and name plate to make sure the merchandise is as ordered.**
  Installing the wrong equipment could result in injury or equipment damage.

● Preliminary Check

When your pump is delivered, you should check the following items:

- Are all of the accessories included in the package?

⚠ ATTENTION

- **Check the name plate to make sure the merchandise is as ordered.**
- **Check to make sure the pump has not been damaged or the bolts and nuts loosened during transport.**

If you discover any accessories to be missing or you find something wrong with the merchandise, please contact your dealer or you may contact us directly.

Nameplate of pump

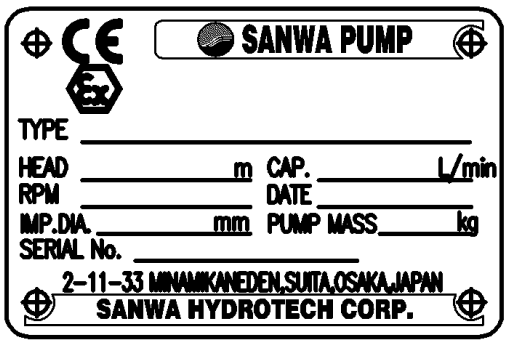

ATEX marking : See Page.20
TYPE : Pump Model and Pump Code.
（See next page）
DATE : Manufactured year and month.
IMP.DIA. : Diameter of impeller inside the pump.
PUMP MASS : The mass of pump. Not include motor.

● Pump model identification

M P O 221

1 2 3

PUMP TYPE PUMP SIZE

1. Liquid Temperature Selection Range

P : STANDARD MODEL

L : LOW TEMPERATURE MODEL

H : HIGH TEMPERATURE MODEL

RANGE	Min. LIQUID TEMP. (℃)	Max. LIQUID TEMP. (℃)	MAGNET MATERIAL	FRAME ADAPTER
P	－30	+150	Nd	
L	－80	R.T.	Nd	Nitrogen purge type
H	R.T.	+280	SmCo	Radiating fin type

※R.T. : Ordinary temperature.

※When temperature fluctuate between extreme high and low, please consult your distributer.

※MP4215: Liquid temperature is maximum 100℃, minimum -30℃.
Only for MP model. No MH or ML models.

2. Impeller Type

(BLANK) : CLOSED IMPELLER

O : OPEN IMPELLER

3. Pump Size

MODEL	SUCTION (mm)	DISCHARGE (mm)	MOTOR FRAME
210	25	20	80 , 90
220			80 , 90
221			90～112
222			90～112
420	40	25	80 , 90
421			90～112

MODEL	SUCTION (mm)	DISCHARGE (mm)	MOTOR FRAME
541	50	40	90～112
542			
4220	40	25	132～160
4220LF			
5225LF	50	25	
5430		40	
8415	80	40	
8420			
8515		50	
8420HF	80	40	132
8525HF	80	50	
4215	40	25	132～160

NOTE：4215 only applies to MP

● Type (Pump Code)

MP222- 170-6 KD F 022 K3290 D- 2 T1
① ② ③ ④ ⑤ ⑥ ⑦ ⑧ ⑨ ⑩

① Pump Model (See Page 14)
② Impeller Size
③ Wet-end main Material
『6』: 316SS
④ Material of Bearing
『KD』: SiC/SiC-D
⑤ Type of Motor
『F』: IEC B5 Flange motor
⑥ Motor Output

Code	Output(kW)
『007』	0.75
『015』	1.5
『022』	2.2
『030』	3.0
『040』	4.0

Code	Output
『055』	5.5
『075』	7.5
『110』	11
『150』	15

⑦ Magnet Coupling-Motor Frame

Code	Magnet Coupling	Motor Frame	Pump Model
『K2680』	K20x6N	80	MP210,MP220,MP221,MP222 MP420,MP421,MP541,MP542
『K2090』	K20N	90	
『K3290』	K32N	90	
『K3211』	K32N	100	
	K32N	112	
『V2511』	V25N	112	MP4220LF,MP4220,MP5225LF MP5430,MP8415,MP8420 MP8515,MP4215
『V4013』	V40N	132	
『V4016』	V40N	160	
『V6516』	V65N	160	
『V6513』	V65N-HF	132	MP8420HF,MP8525HF

⑧ Standard for pipe connection and Motor

『D』: DIN FLANGE + IEC MOTOR

『J』: JIS 10K RF + IEC MOTOR

『A』: ASME150lb RF FLANGE + IEC MOTOR

⑨ Motor Pole

『2』: 2 Pole 『4』: 4 Pole

Note 4Pole is for 8420HF and 8525HF only.

⑩ Temperature

『(BLANK)』: －20～+120 ℃(NORMAL PTFE GASKET)

『F』: －20～+120 ℃

(PTFE GASKET “T9007” ACC TO FDA/EC1935/2004)

『T1』: +121～+150 ℃

『T2』: －30～－21 ℃

Note ⑩ is for MP only.

● Pump Specification

⑤. Design Pressure

		DESIGN PRESSURE (MPaG)	
Liquid Temp.		-30～+100℃	+101～+150℃
MP	210	1.0	
	220		
	221		
	222		
	420		
	421		
	541		
	542		
	4220	1.6	1.2
	4220LF		
	5225LF		1.6
	5430		1.2
	8415		
	8420		
	8515		
	8420HF	1.2	
	8525HF		
	4215	1.6	No Apply

		DESIGN PRESSURE (MPaG)
MPO MH/MHO ML/MLO	210	1.0
	220	
	221	
	222	
	420	
	421	
	541	
	542	

		DESIGN PRESSURE (MPaG)
MPO MH/MHO ML/MLO	4220	1.2
	4220LF	
	5225LF	1.6
	5430	1.2
	8415	
	8420	
	8515	
	8420HF	
	8525HF	

2. Casing Piping Connection

Suction and Discharge：DIN PN16 Flange (steel flange DIN EN 1092-1)
Or JIS 10K RF Flange (steel pipe flange JIS B 2220)

Drain ：Rc threads (taper pipe threads JIS B 0203/ISO 7-1)

3. Viscosity

≦300mPa・s

4. Magnet coupling

PUMP	SIZE	MAGNET COUPLING
MP ML	210 , 220 , 221 , 222 420 , 421 , 541 , 542	K20x6N , K20N , K32N
	4220 , 4220LF , 5430 , 5225LF 8415 , 8420 , 8515 , 4215	V25N , V40N , V65N
	8420HF , 8525HF	V65N-HF
MH	210 , 220 , 221 , 222 420 , 421 , 541 , 542	N25x6H , N25H , N40H
	4220 , 4220LF , 5430 , 5225LF 8415 , 8420 , 8515	V25H , V40H , V65H
	8420HF , 8525HF	V65H-HF

5. Motor

Rated Power :0.75Kw to 15Kw (for detail see Pump Code)
Frame Size:80M to 160M/L (for detail see Pump model identification)

6. Parts Specifications of Each Liquid Temperature Range

	RANGE		
Parts	P (−30～+150℃)	L (−80℃～R.T.)	H (R.T.～+280℃)
SHAFT	STANDARD MODEL		HIGH TEMP. MODEL
MAGNET COUPLING	STANDARD MODEL (MAGNET：Nd The mark includes the letter of "**N**". e.g. K32**N** , K20**N** , V25**N** , V40**N**….)		HIGH TEMP. MODEL (MAGNET：SmCo The mark includes the letter of "**H**" e.g. N40**H** , N25**H** , V25**H** , V40**H**…)
FRAME ADAPTER	STANDARD MODEL	LOW TEMP.MODEL (with N2 or dry air purge port "Rc3/8")	HIGH TEMP. MODEL (with radiator fin)

Note： When temperature fluctuates between extreme high and low, please consult your distributer.

7. Ambient Temperature

Ambient temperature: min. －20 ～ max. 40 degree C

8. Speed Limit

Operating speed: max. 3600 rpm

9. Minimum and Maximum flow rate

Minimum Flow rate: see "data sheet"
Maximum Flow rate: 1.1 x Qopt
※Qopt = Flow rate at Best Efficiency Point

10. Temperature Classification

Refer to the following table for maximum allowable temperature of the pumped liquid in accordance with the applicable temperature category.

The maximum surface temperature of the pump is the highest temperature ascertained from any one of the following conditions:

1. the temperature of the liquid plus, 20℃
2. the temperature of the ambient temperature, plus 20℃

Thus, the maximum liquid temperature for each temperature class is below.

Temperature class	Maximum temperature of liquid
T1	280℃ (536° F)
T2	240℃ (464° F)
T3	160℃ (320° F)
T4	105℃ (221° F)

In case of categories T5 or T6, contact us for further information.

11. Marking

An example of ATEX equipment marking is shown blow. The actual classification of the pump will be engraved on the name plate.



II 2 G Ex h IIC T4-T1 Gb

① ② ③ ④ ⑤ ⑥ ⑦

① Equipment Group ：II (non-mining)

② Category ：2

③ Gas：G

④ Protection measure：c construction safety

⑤ Gas Group：IIC

⑥Temperature Class：(see above chapter 10) It depends on the temperature of pump liquid and ambient temperature.

⑦ Equipment protection level：Gb

Declaration of Conformity

SANWA PUMP

SANWA HYDROTECH CORPORATION
11-33,MINAMIKANEDEN 2 CHOME,SUITA,OSAKA 564-0044 JAPAN
TEL:81-6-6330-4793 FAX:81-6-6330-4924
Web site : www.sanwapump.com

EU DECLARATION OF CONFORMITY

According to EC Machinery Directive 2006/42/EC and ATEX Directive 2014/34/EU

Manufacturer :

SANWA HYDROTECH CORPORATION 2-11-33 MINAMIKANEDEN
SUITA OSAKA 564-0044
JAPAN

Name and address of the authorized representative to compile the Technical file :
IWAKI Europe GmbH
Siemensring 115 D-47877 Willich Germany

SANWA HYDROTECH CORPORATION declares under our sole responsibility that the product described as :

Equipment Name : Centrifugal pump for liquid
Generic Equipment Description : SANWA PUMP
Model / Type : MP 210 , MP 220 , MP 221 , MP 222 , MP 420 , MP 421 , MP 541
MP 542 , MP 423 , MP 543 , MP 842
MP 4220 , MP 4220LF , MP 5430 , MP 5225LF , MP 8415
MP 8420 , MP 8515 , MP 8420HF , MP 8525HF , MP4215

Serial No. :

CAR-MP-2301-1/2

SANWA PUMP

SANWA HYDROTECH CORPORATION

11-33,MINAMIKANEDEN 2 CHOME,SUITA,OSAKA 564-0044 JAPAN
TEL:81-6-6330-4793 FAX:81-6-6330-4924
Web site : www.sanwapump.com

Compiles with the requirements of the Machinery Directive 2006/42/EC
the RoHS Directive 2011/65/EU
the ATEX Directive 2014/34/EU
Equipment Group Ⅱ Category 2G ;
Ⅱ2G Ex h ⅡC T4-T1

And furthermore declares that the following (parts / clause of) harmonized standards have been applied :

EN ISO12100 : 2010
Safety of machinery basic concepts, general principles for design
- Part 1 : basic terminology, methodology
- Part 2 : technical principles

EN 809 : 2009 Pumps and pump units for liquids - Common Safety requirement
EN 60204-1 : 2009 Electrical equipment of machines - Part 1 : general requirement.
EN ISO 80079-36:2016 Non-electrical equipment for explosive atmospheres
EN ISO 80079-37:2016 Protection by constructional safety 'c'
EN 50581:2012 Technical documentation for the assessment of electrical and electronic products with respect to the restriction of hazardous substances

Place and Date of declaration :
JAPAN Jan 17, 2023

T. Shimayoshi

Takayuki Shimayoshi
Manager of Engineering Dept.
Company name : SANWA HYDROTECH CORPORATION.

CAR-MP-2301-2/2

SANWA PUMP

SANWA HYDROTECH CORPORATION
11-33,MINAMIKANEDEN 2 CHOME,SUITA,OSAKA 564-0044 JAPAN
TEL:81-6-6330-4793 FAX:81-6-6330-4924
Web site : www.sanwapump.com

EU DECLARATION OF CONFORMITY

According to EC Machinery Directive 2006/42/EC and ATEX Directive 2014/34/EU

Manufacturer :

SANWA HYDROTECH CORPORATION 2-11-33 MINAMIKANEDEN
SUITA OSAKA 564-0044
JAPAN

Name and address of the authorized representative to compile the Technical file :
IWAKI Europe GmbH
Siemensring 115 D-47877 Willich Germany

SANWA HYDROTECH CORPORATION declares under our sole responsibility that the product described as :

Equipment Name : Centrifugal pump for liquid
Generic Equipment Description : SANWA PUMP
Model / Type : MPO 220 , MPO 221 , MPO 222 , MPO 420 , MPO 542
MPO 4220LF , MPO 5430 , MPO 8415

Serial No. :

CAR-MPO-2301-1/2

SANWA PUMP

SANWA HYDROTECH CORPORATION

11-33,MINAMIKANEDEN 2 CHOME,SUITA,OSAKA 564-0044 JAPAN
TEL:81-6-6330-4793 FAX:81-6-6330-4924
Web site : www.sanwapump.com

Compiles with the requirements of the Machinery Directive 2006/42/EC
the RoHS Directive 2011/65/EU
the ATEX Directive 2014/34/EU
Equipment Group Ⅱ Category 2G :
Ⅱ 2G Ex h ⅡC T4-T1

And furthermore declares that the following (parts / clause of) harmonized standards have been applied :

EN ISO12100 : 2010
Safety of machinery basic concepts, general principles for design
- Part 1 : basic terminology, methodology
- Part 2 : technical principles

EN 809 : 2009 Pumps and pump units for liquids - Common Safety requirement
EN 60204-1 : 2009 Electrical equipment of machines - Part 1 : general requirement.
EN ISO 80079-36:2016 Non-electrical equipment for explosive atmospheres
EN ISO 80079-37:2016 Protection by constructional safety 'c'
EN 50581:2012 Technical documentation for the assessment of electrical and electronic products with respect to the restriction of hazardous substances

Place and Date of declaration :
JAPAN Jan 17, 2023

T. Shimayoshi

Takayuki Shimayoshi
Manager of Engineering Dept.
Company name : SANWA HYDROTECH CORPORATION.

CAR-MPO-2301-2/2

SANWA PUMP

SANWA HYDROTECH CORPORATION

11-33,MINAMIKANEDEN 2 CHOME,SUITA,OSAKA 564-0044 JAPAN
TEL:81-6-6330-4793 FAX:81-6-6330-4924
Web site : www.sanwapump.com

EU DECLARATION OF CONFORMITY

According to EC Machinery Directive 2006/42/EC and ATEX Directive 2014/34/EU

Manufacturer :

SANWA HYDROTECH CORPORATION 2-11-33 MINAMIKANEDEN
SUITA OSAKA 564-0044
JAPAN

Name and address of the authorized representative to compile the Technical file :

IWAKI Europe GmbH
Siemensring 115 D-47877 Willich Germany

SANWA HYDROTECH CORPORATION declares under our sole responsibility that the product described as :

Equipment Name : Centrifugal pump for liquid
Generic Equipment Description : SANWA PUMP
Model / Type : MH 210 , MH 220 , MH 221 , MH 222 , MH 420 , MH 421 , MH 541
MH 542 , MH 423 , MH 543 , MH 842
MH 4220 , MH 4220LF , MH 5430 , MH 5225LF , MH 8415
MH 8420 , MH 8515 , MH 8420HF , MH 8525HF

Serial No. :

CAR-MH-2301-1/2

SANWA PUMP

SANWA HYDROTECH CORPORATION

11-33,MINAMIKANEDEN 2 CHOME,SUITA,OSAKA 564-0044 JAPAN
TEL:81-6-6330-4793 FAX:81-6-6330-4924
Web site : www.sanwapump.com

Compiles with the requirements of the Machinery Directive 2006/42/EC
the RoHS Directive 2011/65/EU
the ATEX Directive 2014/34/EU
Equipment Group Ⅱ Category 2G ;
Ⅱ2G Ex h ⅡC T4-T1

And furthermore declares that the following (parts / clause of) harmonized standards have been applied :

EN ISO12100 : 2010
Safety of machinery basic concepts, general principles for design
- Part 1 : basic terminology, methodology
- Part 2 : technical principles

EN 809 : 2009 Pumps and pump units for liquids - Common Safety requirement
EN 60204-1 : 2009 Electrical equipment of machines - Part 1 : general requirement.
EN ISO 80079-36:2016 Non-electrical equipment for explosive atmospheres
EN ISO 80079-37:2016 Protection by constructional safety 'c'
EN 50581:2012 Technical documentation for the assessment of electrical and electronic products with respect to the restriction of hazardous substances

Place and Date of declaration :
JAPAN Jan 17, 2023

T. Shimayoshi

Takayuki Shimayoshi
Manager of Engineering Dept.
Company name : SANWA HYDROTECH CORPORATION.

CAR-MH-2301-2/2

SANWA PUMP

SANWA HYDROTECH CORPORATION
11-33,MINAMIKANEDEN 2 CHOME,SUITA,OSAKA 564-0044 JAPAN
TEL:81-6-6330-4793 FAX:81-6-6330-4924
Web site : www.sanwapump.com

EU DECLARATION OF CONFORMITY

According to EC Machinery Directive 2006/42/EC and ATEX Directive 2014/34/EU

Manufacturer :

SANWA HYDROTECH CORPORATION
2-11-33 MINAMIKANEDEN
SUITA OSAKA 564-0044
JAPAN

Name and address of the authorized representative to compile the Technical file :

IWAKI Europe GmbH
Siemensring 115 D-47877 Willich Germany

SANWA HYDROTECH CORPORATION declares under our sole responsibility that the product described as :

Equipment Name : Centrifugal pump for liquid
Generic Equipment Description : SANWA PUMP
Model / Type : MHO 220 , MHO 221 , MHO 222 , MHO 420 , MHO 542
MHO 4220LF , MHO 5430 , MHO 8415

Serial No. :

CAR-MHO-2301-1/2

SANWA PUMP

SANWA HYDROTECH CORPORATION

11-33,MINAMIKANEDEN 2 CHOME,SUITA,OSAKA 564-0044 JAPAN
TEL:81-6-6330-4793 FAX:81-6-6330-4924
Web site : www.sanwapump.com

Compiles with the requirements of the Machinery Directive 2006/42/EC
the RoHS Directive 2011/65/EU
the ATEX Directive 2014/34/EU
Equipment Group Ⅱ Category 2G :
Ⅱ2G Ex h ⅡC T4-T1

And furthermore declares that the following (parts / clause of) harmonized standards have been applied :

EN ISO12100 : 2010
Safety of machinery basic concepts, general principles for design
- Part 1 : basic terminology, methodology
- Part 2 : technical principles

EN 809 : 2009 Pumps and pump units for liquids - Common Safety requirement
EN 60204-1 : 2009 Electrical equipment of machines - Part 1 : general requirement.
EN ISO 80079-36:2016 Non-electrical equipment for explosive atmospheres
EN ISO 80079-37:2016 Protection by constructional safety 'c'
EN 50581:2012 Technical documentation for the assessment of electrical and electronic products with respect to the restriction of hazardous substances

Place and Date of declaration :
JAPAN Jan 17, 2023

T. Shimayoshi

Takayuki Shimayoshi
Manager of Engineering Dept.
Company name : SANWA HYDROTECH CORPORATION.

CAR-MHO-2301-2/2

SANWA PUMP

SANWA HYDROTECH CORPORATION

11-33,MINAMIKANEDEN 2 CHOME,SUITA,OSAKA 564-0044 JAPAN
TEL:81-6-6330-4793 FAX:81-6-6330-4924
Web site : www.sanwapump.com

EU DECLARATION OF CONFORMITY

According to EC Machinery Directive 2006/42/EC and ATEX Directive 2014/34/EU

Manufacturer :

SANWA HYDROTECH CORPORATION 2-11-33 MINAMIKANEDEN
SUITA OSAKA 564-0044
JAPAN

Name and address of the authorized representative to compile the Technical file :

IWAKI Europe GmbH
Siemensring 115 D-47877 Willich Germany

SANWA HYDROTECH CORPORATION declares under our sole responsibility that the product described as :

Equipment Name : Centrifugal pump for liquid
Generic Equipment Description : SANWA PUMP
Model / Type : ML 210 , ML 220 , ML 221 , ML 222 , ML 420 , ML 421 , ML 541
ML 542 , ML 423 , ML 543 , ML 842
ML 4220 , ML 4220LF , ML 5430 , ML 5225LF , ML 8415
ML 8420 , ML 8515 , ML 8420HF , ML 8525HF

Serial No. :

CAR-ML-2301-1/2

SANWA PUMP

SANWA HYDROTECH CORPORATION

11-33,MINAMIKANEDEN 2 CHOME,SUITA,OSAKA 564-0044 JAPAN
TEL:81-6-6330-4793 FAX:81-6-6330-4924
Web site : www.sanwapump.com

Compiles with the requirements of the Machinery Directive 2006/42/EC
the RoHS Directive 2011/65/EU
the ATEX Directive 2014/34/EU
Equipment Group Ⅱ Category 2G :
Ⅱ2G Ex h ⅡC T4-T1

And furthermore declares that the following (parts / clause of) harmonized standards have been applied :

EN ISO12100 : 2010
Safety of machinery basic concepts, general principles for design
- Part 1 : basic terminology, methodology
- Part 2 : technical principles

EN 809 : 2009 Pumps and pump units for liquids - Common Safety requirement
EN 60204-1 : 2009 Electrical equipment of machines - Part 1 : general requirement.
EN ISO 80079-36:2016 Non-electrical equipment for explosive atmospheres
EN ISO 80079-37:2016 Protection by constructional safety 'c'
EN 50581:2012 Technical documentation for the assessment of electrical and electronic products with respect to the restriction of hazardous substances

Place and Date of declaration :
JAPAN Jan 17, 2023

T. Shimayoshi

Takayuki Shimayoshi
Manager of Engineering Dept.
Company name : SANWA HYDROTECH CORPORATION.

CAR-ML-2301-2/2

SANWA PUMP

SANWA HYDROTECH CORPORATION
11-33,MINAMIKANEDEN 2 CHOME,SUITA,OSAKA 564-0044 JAPAN
TEL:81-6-6330-4793 FAX:81-6-6330-4924
Web site : www.sanwapump.com

EU DECLARATION OF CONFORMITY

According to EC Machinery Directive 2006/42/EC and ATEX Directive 2014/34/EU

Manufacturer :

SANWA HYDROTECH CORPORATION 2-11-33 MINAMIKANEDEN
SUITA OSAKA 564-0044
JAPAN

Name and address of the authorized representative to compile the Technical file :

IWAKI Europe GmbH
Siemensring 115 D-47877 Willich Germany

SANWA HYDROTECH CORPORATION declares under our sole responsibility that the product described as :

Equipment Name : Centrifugal pump for liquid
Generic Equipment Description : SANWA PUMP
Model / Type : MLO 220 , MLO 221 , MLO 222 , MLO 420 , MLO 542
MLO 4220LF , MLO 5430 , MLO 8415

Serial No. :

CAR-MLO-2301-1/2

SANWA PUMP

SANWA HYDROTECH CORPORATION

11-33,MINAMIKANEDEN 2 CHOME,SUITA,OSAKA 564-0044 JAPAN
TEL:81-6-6330-4793 FAX:81-6-6330-4924
Web site : www.sanwapump.com

Compiles with the requirements of the Machinery Directive 2006/42/EC
the RoHS Directive 2011/65/EU
the ATEX Directive 2014/34/EU
Equipment Group Ⅱ Category 2G :
Ⅱ2G Ex h ⅡC T4-T1

And furthermore declares that the following (parts / clause of) harmonized standards have been applied :

EN ISO12100 : 2010
Safety of machinery basic concepts, general principles for design
- Part 1 : basic terminology, methodology
- Part 2 : technical principles

EN 809 : 2009 Pumps and pump units for liquids - Common Safety requirement
EN 60204-1 : 2009 Electrical equipment of machines - Part 1 : general requirement.
EN ISO 80079-36:2016 Non-electrical equipment for explosive atmospheres
EN ISO 80079-37:2016 Protection by constructional safety 'c'
EN 50581:2012 Technical documentation for the assessment of electrical and electronic products with respect to the restriction of hazardous substances

Place and Date of declaration :
JAPAN Jan 17, 2023

T.Shimayoshi

Takayuki Shimayoshi
Manager of Engineering Dept.
Company name : SANWA HYDROTECH CORPORATION.

CAR-MLO-2301-2/2

● Pump Installation

1. Installation

- The position of the pump should be finalized after considering the pump suction capacity. If the suction head is not enough, cavitations and abnormal vibration/noise will occur.
- The pump should be installed in a place which provides sufficient space for maintenance and inspections.
- The foundation should be strong enough against vibration and should provide enough volume and area to support the weight of the pump and motor. The pump base should be securely fastened to the foundation by anchor bolts.
- Dirt and foreign objects in the suction tank and piping could cause equipment failure. Be sure to clean the tank and piping before introducing liquid.

⚠ ATTENTION

- **Before attempting to hoist the pump, find out the weight of the pump including the motor, and use a rope or hoisting equipment capable of supporting the load in order to prevent the pump from falling.**

2. Piping

- Horizontal suction piping should gradually rise toward the inlet port of the pump. (Minimum gradient of 1/50)
- A foot valve or strainer should be mounted on the ends of pipes to prevent foreign objects from being sucked in.
- Suction piping may be provided with a gate valve to facilitate disassembly and inspection in case of positive pressure of the liquid at suction port. The valve should be fully open while the pump is operating.

NOTE

- **The weight of the suction and discharge piping can cause misalignment or equipment failure. Be sure to provide sufficient support for the piping.**
- **The piping should be as short as possible, with a minimum of bends.**
- **Absolutely do not use piping of a diameter smaller than that of the pump suction bore.**
- **Do not provide protrusions which can form air pockets in horizontal piping.**
- **Be careful not to allow pipe thread cuttings or other foreign objects to enter when laying and fitting piping.**

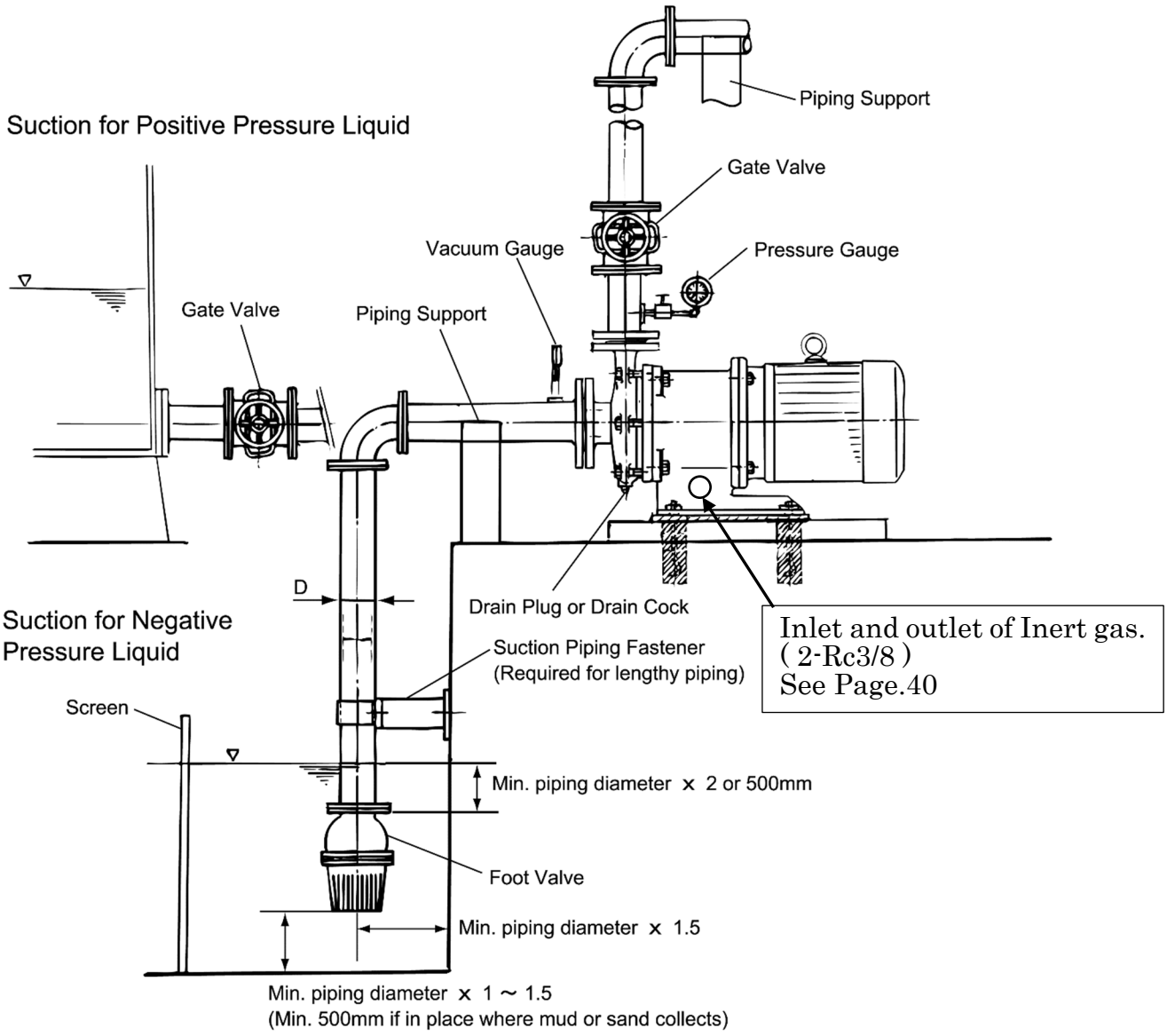

3. Wiring

⚠ DANGER

- **Power supply equipment, wiring and the earth terminal connection should be in accordance with technical standards for electrical equipment and inner wiring diagrams. Piping or the earth terminal connecting work performed by unqualified personnel is not only in violation of the law, but is extremely dangerous. Absolutely do not allow piping or the earth terminal connecting to be performed by unqualified individuals. You are also obligated by law to provide an earth leakage breaker and overload protection equipment to prevent electrical shock or fire.**

4.Earthing

Pumps that have been supplied in accordance to the ATEX Directive (2014/34/EU) will be identified by a label with the following symbol on it;

Once pump has been installed, the earth of motor terminal box should be wired to earth with a suitable earthing cable. In addition, please carry out the bonding of the plumbing, if necessary.

5.Cover

- Do not cover the frame adapter of "MH" and "MHO" type. This part has the fins and the holes for radiating. If it is covered, temperature of the pump or motor will be rise up. If it is necessary to insulate the pump's high temperature, cover only the casing of the pump.

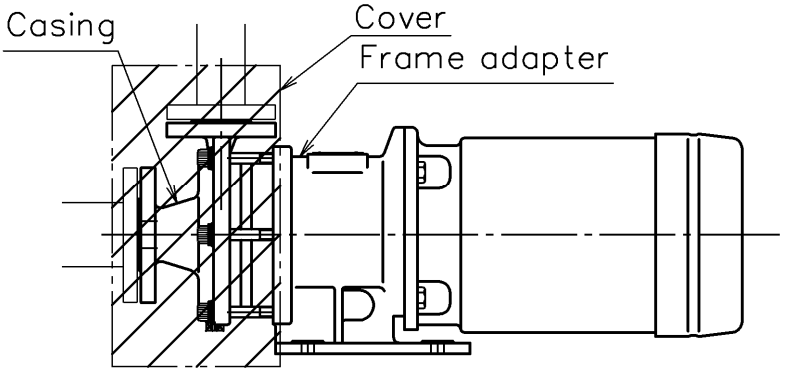

● Operation

1. Pre-Operation Inspections (Be sure to turn the power off before performing inspections!)

1. Tighten flange bolts and machine base bolts.
2. Supply liquid after thoroughly cleaning the inside of piping and tanks.
3. Check if you can turn the motor's fan by hand without supplying power.
4. Purge all the air from the pump.
   - Pumping liquids with positive pressure;
     Fully open the suction and discharge valves, and purge all the air remaining in the pump casing. Be sure to install and use the optional cock or valve in case pipe layout might cause air purge difficulty.
   - Pumping liquids with negative pressure;
     A vacuum pump is used for suction pumping. The pump can also be filled with liquid from the discharge piping. When doing so, purge all air by opening the air purge cock while being careful not to allow high pressure to the suction piping or foot valve.

2. Operation

1. After priming, turn the switch on and off one or two times, and make sure the rotation direction (clock wise direction when viewed from the motor side) is correct and that the pump operates normally.



- When check the direction of rotating, the pump must be full filled. Otherwise the temperature of the pump will be rise up.

- If it works in reverse, check inside wiring connection of the terminal box of the motor and change wiring connection accordingly. (motor rotation will be checked by "arrow" indication at motor frame adaptor and motor fan's rotating direction.)



- Make sure that the valve of discharge pipe is sufficiently opened (not fully opened) for Minimum Flow Continuously before starting the pump.

- Before operate the pump, if pump liquid is under 0℃, make sure that the motor's fan can be turned smoothly by hand. If not, remove a motor and check whether rear casing and magnet coupling (M) do not freeze.

2. When the pump arrives at the specified speed, open the gate valve immediately.
3. When the pump starts, check for abnormal noises, vibration, or rising discharge pressure. When the pump arrives at the specified speed and the discharge pressure gauge reaches shut-off pressure, gradually open the gate valve on the discharge side until it reaches the specified discharge pressure.

NOTE

- **Do not operate the pump with the discharge valve shut-off.**
- **Do not operate the pump at the flow that lower than Minimum Flow Continuously (M.F.C). Otherwise the temperature of pump surface is increase, and may exceed the maximum allowable temperature. M.F.C is indicated in datasheet. Take the appropriate measure like below to prevent this;**
  - **Bypass-line (return from the discharge pipe to the suction tank) enough to M.F.C**

- **Excessively opening the discharge valve will overload the motor. You should keep an eye on the ammeter while opening the valve to avoid excessive current.**

Operation and handling

- Never perform cavitation or no-load operation. Doing so could damage the bushings. Shut the pump off immediately if you discover the pump to be operating in such conditions.
- When perform no-load operation, the temperature of the surface of rear-casing and the journal bearing will be rise up.
- If the magnet coupling slips, stop the pump immediately within one minute. Continuing to operate with the magnet coupling slipping may demagnetize the magnet coupling, resulting in engine failure.

Protection;

We recommend installing the dry-run monitor, for protecting the pump from the problem such as the lowering of magnetic force, and the cavitation and the dry run operation..

- On ML type, while a casing is filled by a cold liquid, we strongly recommend that inside of frame adapter is filled with inert gas or dry air. (Refer to the table below.) Otherwise the dew condensation and freeze may occur inside frame adapter and it make magnet coupling lock.

PUMP	SIZE	MOTOR FRAME	INERT GAS PURGING	
			CAPACITY (L/min)	APPROX. PRESSURE (MPaG)
ML/MLO	210 , 220 , 221 , 222 420 , 421 , 541 , 542	80 , 90～112	1～3	0.01
	4220 , 4220LF , 5430 , 5225LF , 8415 , 8420 , 8515	112 , 132	4～6	
		160	6～8	
	8420HF , 8525HF	132	4～6	

⚠ WARNING

- **Do not insert your fingers or other parts of your body in the openings of the frame adapter while the pump is operating. Touching the rotating parts inside could result in injury.**

⚠ ATTENTION

- **High Temperature**
  If pumping hot liquids, do not place your hands or other parts of your body near the casing or frame adapter. Doing so could result in skin burns.
- **No-Load Operation Prohibited** ⃠
  The bearings are lubricated by liquid pumped. Running the pump without liquid to be pumped should be avoided. If for some reason no-load operation is happened for several seconds, do not introduce liquid right away, but rather let the pump cool for at least an hour before restarting operation with liquid. (Suddenly introducing cool liquid can crack ceramic parts, etc.)
- **Shut-Off Operation Prohibited** ⃠
  Performing shut-off operation for an extended period of time can heat the pump resulting in an accident.

Effects of Temperature

- If the pump is used with a liquid at a temperature lower than 0˚C, and if the ambient humidity is high, condensation may occur inside the frame adapter. If lower than －30degree C, we recommend strongly purging N2 gas (or dry air) into the frame adapter. Otherwise the condensations may damage the product.

Model	Liquid temperature range
MP/MPO	−30 to +150°C
MH/MHO	R.T. to +280°C
ML/MLO	−80°C to R.T.

※When the temperatures fluctuate between extreme high and low, consult your distributer.

- Although the performance of the pump itself is not affected by temperature, the specific gravity, viscosity, vapor pressure and corrosiveness of the liquid are affected. You must therefore be aware of changes in the properties of the liquids handled.

Variation of Performance by Specific Gravity

- Pump performance is affected by specific gravity of the liquids, then a suitable power unit (motor, inner-magnet coupling and outer magnet coupling) must be applied by considering the specific gravity of the liquid.



- If a power unit does not meet the power required, “decoupling” will be occurred and then the temperature of pump surface will rise up.

Variation in Performance According to Viscosity

- Discharge flow rate and the total head of pumps are lower for high viscosity liquids than when using fresh water and more power is required to pump viscous liquids. Use a power unit which meets the power required.



- If discharge flow is too low, the temperature of pump surface will be rise up. Be sure the allowable of viscosity and minimum continuous flow by this manual or datasheet.
- If a power unit does not meet the power required, “decoupling” will be occurred and then the temperature of pump surface will rise up.

※In case of higher viscosity liquid, consult with us.

Slurry

- The pump is designed to handle some slurry and sludge. Before attempting to pump liquids containing slurry or sludge, find out the slurry content and size of the particles, and consult with us.



- The slurry with abrasion characteristics lets an impeller wear. If flow quantity becomes smaller than a permission level by the abrasion of the impeller, the surface temperature of the pump rises, and the risk of the ignition grows.

Specific heat capacity



- Pump performance itself is not affected by specific heat capacity. But in case of operation with low specific heat capacity liquid in closed circuit system, the temperature of liquid is easy to rise. Use the appropriate measures to prevent the pump from excessively heating up.

Noise Level

- Typical sound pressure levels measured in dB(A)(at distance 1m from the motor and a high 1.6m from the floor) are shown in the table below. (In case of using typical motor)
- Pump noise level depends on a number of factors – the type of driver, the operating capacity, piping design and acoustic characteristics of the building. If the motor is driven by inverter, noise level will be increased.

		2Px60Hz dB(A)	2Px50Hz dB(A)	4Px60Hz dB(A)	4Px50Hz dB(A)
MP/MPO MH/MHO ML/MLO	210	71	70	-	-
	220	73	70	-	-
	221	77	73	-	-
	222	78	75	-	-
	420	75	71	-	-
	421	77	73	-	-
	541	77	73	-	-
	542	78	75	-	-
	4215	80	77	-	-
	4220	80	77	-	-
	4220LF	80	77	-	-
	5225LF	80	77	-	-
	5430	80	77	-	-
	8415	80	77	-	-
	8420	80	77	-	-
	8515	80	77	-	-
	8420HF	-	-	75	72
	8525HF	-	-	75	72

3. Shutting Down

1. Shut the discharge valve.
2. Stop the motor. When turned off, the motor should gradually slow down to a smooth stop. (If it does not stop smoothly, check the inside of the pump to see if everything is as it should be.)
3. In case of power failure during operation, turn off the switch and shut the discharge gate valve.

4. Be sure to keep providing the N2 gas or dry air purge until drain off the liquid from pump. (If low temperature liquid)

● Maintenance and Inspection

1. Routine Inspection

Item	Advice
Does the pump run smoothly without vibration?	Permissible amplitude of vibration for the pump with 2P motor is 28/33μm as maximum and 47/54μm, maximum for the pump equipped with 4P motor(60/50HZ). If abnormal noise is produced by the bearings or other parts, stop the pump immediately and check each part. Please contact us immediately if you can not find reasons of such noise and vibration.
Suction liquid level and suction port pressure	The pressure gauge reading is proportional to the specific gravity of the liquid. The gauge cock for the pressure and vacuum gauges is to be opened for measurement only. Shut the gauge cock after measuring.
Pump operating load	Discharge pressure under operation must be checked according to the figure showed on the specification plate of the pump. Electric current must be lower than figure showed on the specification plate of the motor.

- A periodic inspection should be performed at least once a year. A record of periodic inspections should be kept.
- If the pump is not to be used for an extended period of time, be sure to remove the drain plug and drain the liquid from the pump. (In frigid regions, the pump could be damaged if liquid freezes in the pump.
- To preserve the life of the pump and motor, be sure not to start the pump more than six times per hour.
- About the motor, maintain it regularly according to the instruction manual of the motor.

2. Configuration and Location of Part

A list of parts (below) and a configuration diagram (following page) are given to provide a general description of the pump. You may refer to these as you read the instruction manual.

Parts (all size)

No.	Part	Material	Qty.	Remark
101	Coupling key		1	
100	Motor		1	
69	Name plate	304SS	1	
64	Hexagon head bolt (flange)	304SS	1	Temp. Range H/L
63	Hexagon head bolt (motor)	304SS	4	
62	Hexagon socket head cap screw (casing) or Hexagon bolt (casing)	304SS	—	
61	Set screw	Steel	1	
51	Plug	316SS	1	
(41)	Heat insulation sheet (between frame adapter and motor)	MICA	3	Temp. Range H only
40	Pin (or screw)	316SS	2	
33	Sheet gasket		1	
29	Thrust ring	SiC	2	
45	Bushing	SiC	2	
20B	Magnet	RARE EARTH	1S	
	Magnet coupling (M)	Cast Iron	1	
20A	Magnet	RARE EARTH	1S	
	Magnet coupling (P)	316SS	1	
(16)	Flange (casing)	304SS	1	Temp. Range H/L
(15A)	Eye bolt	Steel	1	
15	Frame adapter	Cast Iron	1	
9	Sleeve	SiC-D	2	
8B	Coupling key	316SS	1	
8A	Impeller key	316SS	1	
8	Shaft	316SS	1	
7	Impeller nut	316SS	1	
4A	Hexagon socket head cap screw	316SS	4	
4	Rear casing	316SS	1	
3	Casing cover	316SS	1	
2	Casing	316SS	1	
1	Impeller	316SS	1	

NOTE：**Casing cover and pin** / Rear casing and pin **are one apparatus.**
(**size 210, 220, 221, 222, 420, 421, 541, 542**)

Configuration (size 210, 220, 221, 222, 420, 421, 541, 542)

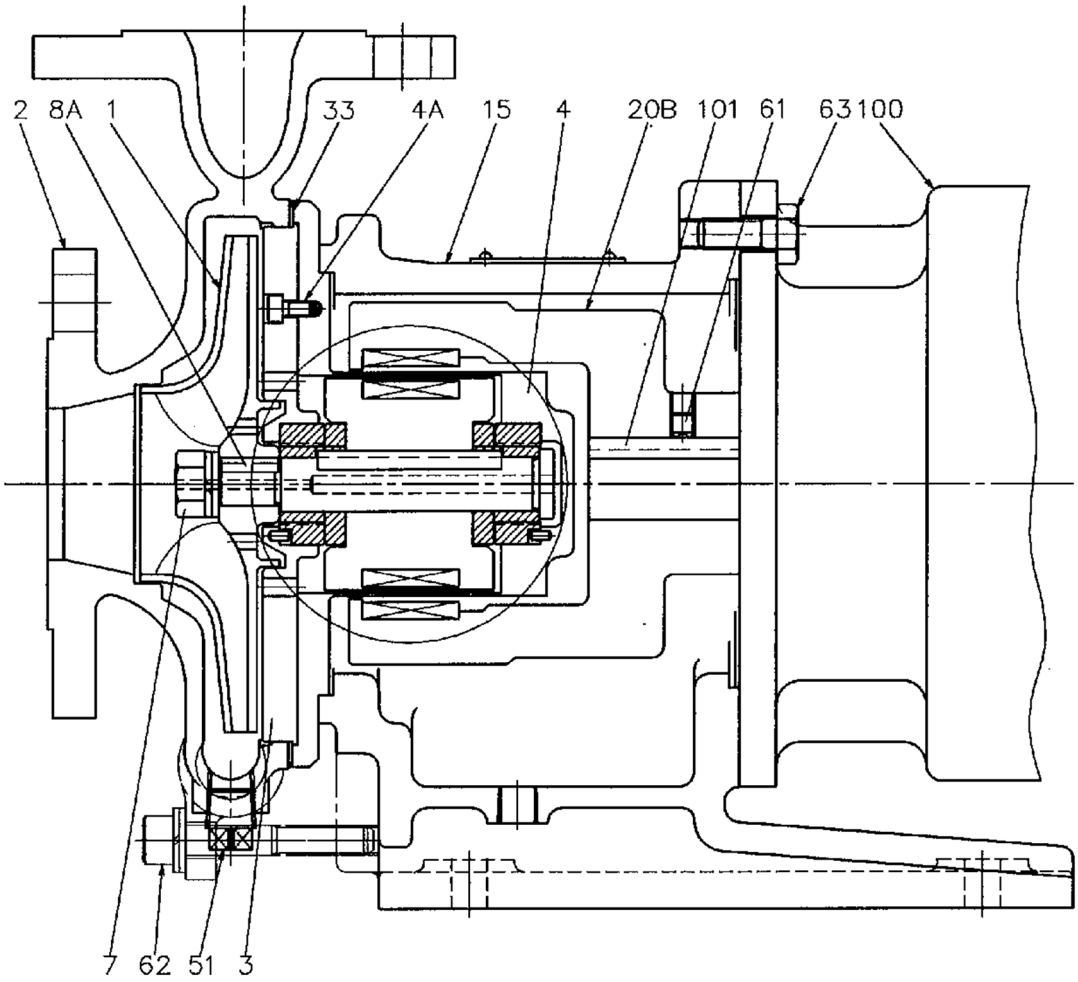

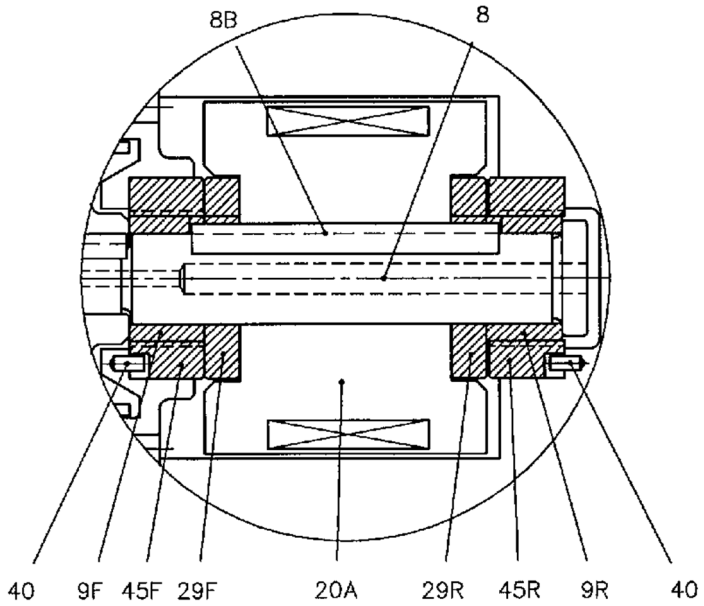

※Basically, the structure of “Closed impeller type(such as MP)” is same as “Open impeller type(such as MPO)”. Difference is the figure of impeller/casing/casing cover.

Configuration (size 4215, 4220, 4220LF, 5430, 5225LF, 8415, 8420, 8420HF,8515,8525HF)

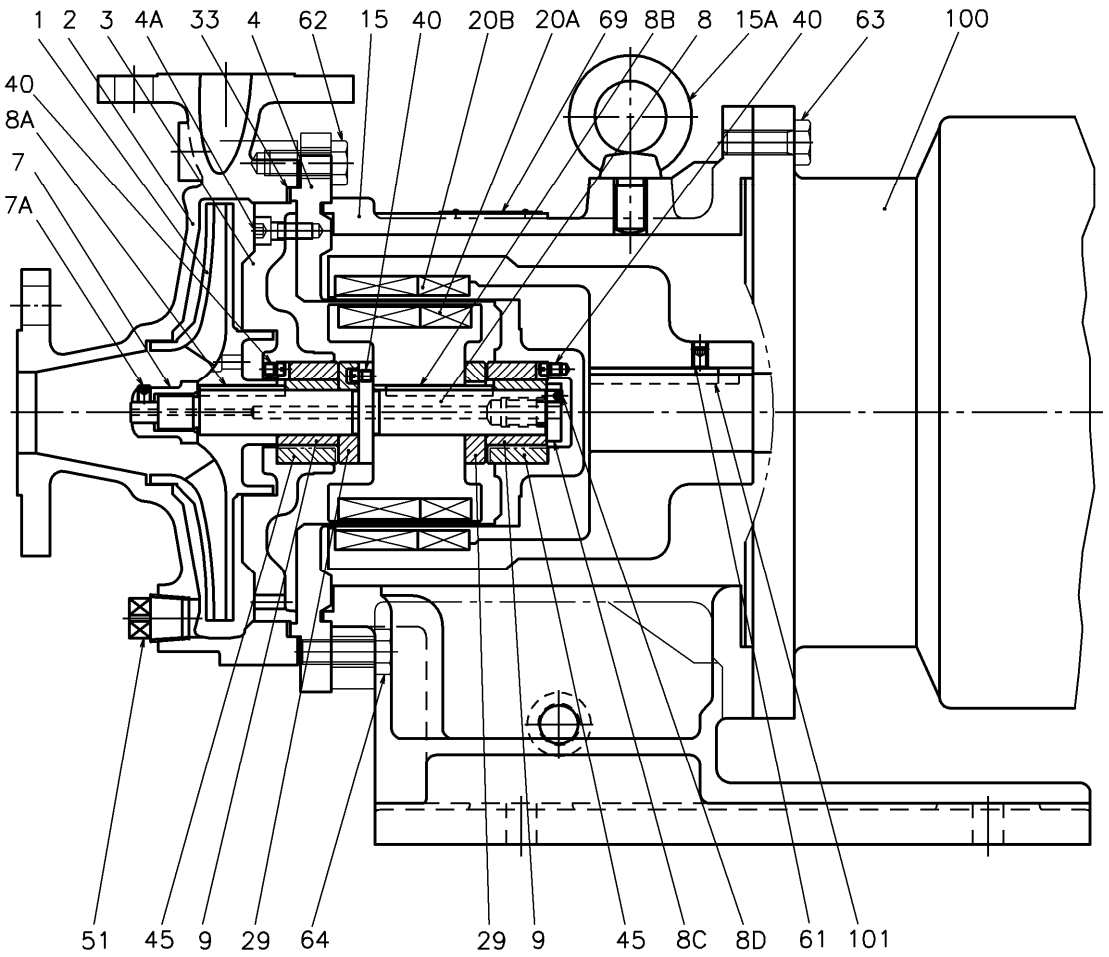

MP

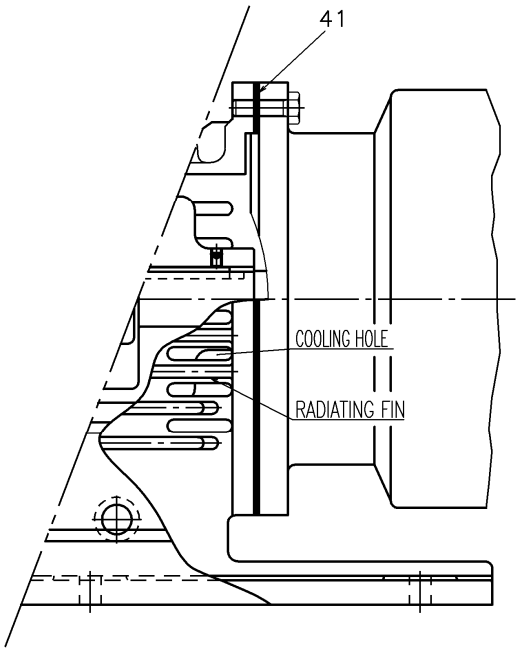

MH

3. Order of Disassembly and Assembly

⚠ WARNING

- **Magnet drives cause strong magnetic fields. Persons with a pacemaker should not stay close to the magnet drive or come into close bodily contact with parts of it.**

⚠ ATTENTION

- **The magnet coupling uses powerful magnets which attract metal and other magnetic materials. The workbench, therefore, should be made of wood or plastic.**
- **We recommend the use of non-magnetic stainless steel tools for disassembling the pump. If using tools made of a material subject to magnetic attraction such as iron, be careful not to allow them to get near the magnetic parts.**

For MP 210,220,221,222,420,421,541,542

Disassembly Order	Part No.	Part	Important Suggestions	Assembly Order
1	65	Hexagon head bolt		29
2	51	Plug	Completely drain liquid from the casing.	28
3	62	Hexagon socket head bolt	Tighten each bolt equally when assembling	27
4	2	Casing	Pull out carefully and quietly.	26
5	7	Impeller nut	Uses right-hand threads: Turn to the left to loosen.	25
6	1	Impeller	Keep two levers in case the impeller gets too tight. Check the inside of impeller. When impeller is clogging, cooling flow for bearing will be lower.	24
7	3～4	Casing cover and rear casing	Screw the two casing bolts (62) into the screw holes on the casing cover and lift out by pulling with force. The casing cover is attracted by magnetic force, so be extremely careful not to relax your grip until it is completely out of reach of the magnetic force. The can of the rear casing is very thin. Be careful not to damage it while handling. When assembling, [UP] mark of casing cover and rear casing must faces upward.	23
8	15	Frame adapter and motor		22
9	33	Casing gasket		21

Disassembly Order	Part No.	Part	Important Suggestions	Assembly Order
10	4A	Hexagon socket head bolt		20
11	3, 40	Casing cover & Pin	If the case is hard to remove, drive the casing bolts (62) further and use as a push bolt. The casing cover is marked with [UP].	19
12	45	Bushing		18
13	8～20A	Inner magnet coupling	The side marked [FRONT] is the impeller side.	17
14	4, 40	Rear casing & Pin		16
15	45	Bushing		15
16	8A	Impeller key	Material mark should face upward.	14
17	9	Sleeve		13
18	29	Thrust ring		12
19	20A	Inner magnet coupling	Powerful magnetic force requires attention.	11
20	29	Thrust ring		10
21	8B	Coupling key	Material mark should face upward.	9
22	9	Sleeve		8
23	8	Shaft	Be sure that the center-hole is clean and not be interrupted	7
24	63	Hexagon head bolt		6
25	15	Frame adaptor		5
26	100	Motor		4
27	61	Set screw	Use hexagonal wrench for M8 screw.	3
28	20B	Outer magnet coupling		2
29	101	Motor shaft key		1

※On ML type, Please apply a liquid gasket to seal it between a frame adapter(15) and a flange(16), and a frame adapter(15) and motor(100) when assembling. Then the leak of the inert gas or dry air is held down to a minimum.

※Points to ponder when mounting Outer magnet coupling

1. Check the dimension.

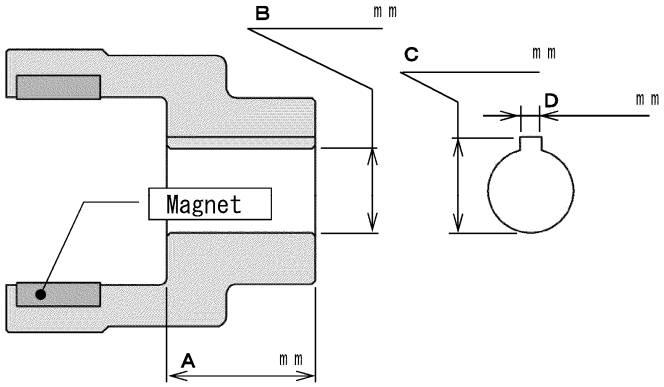

2. Points to ponder.

2-1 When it's difficult to mount, please lubricant the shaft with oil or other lubricant. Tapping magnet coupling (M) directly prohibited. Doing so may break the magnet.

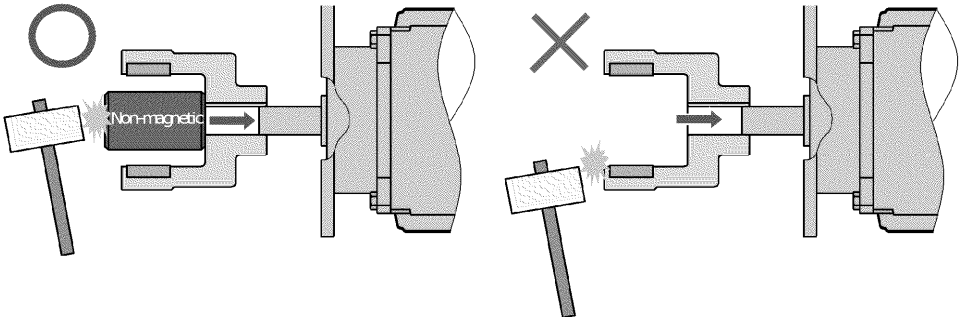

2-2 please insert motor shaft accurately parallel to magnet coupling (M). Nothing so may result in scratch or crank on the motor shaft.

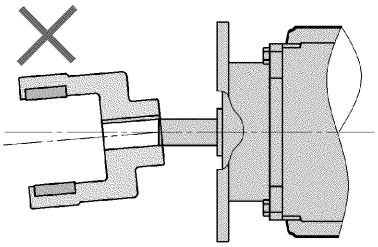

2-3 please make sure that the motor shaft end is straight (flush) with the inside bottom of magnet coupling (M).

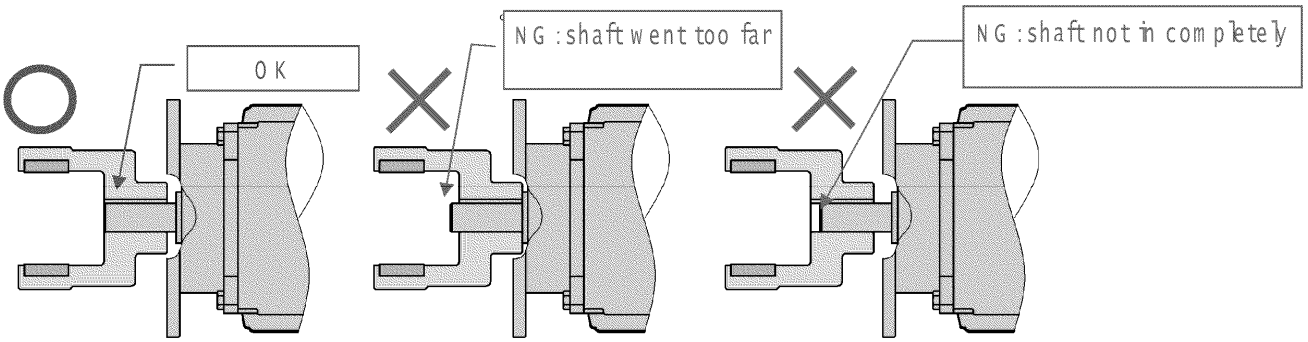

Numbers in the drawing indicate the parts number.

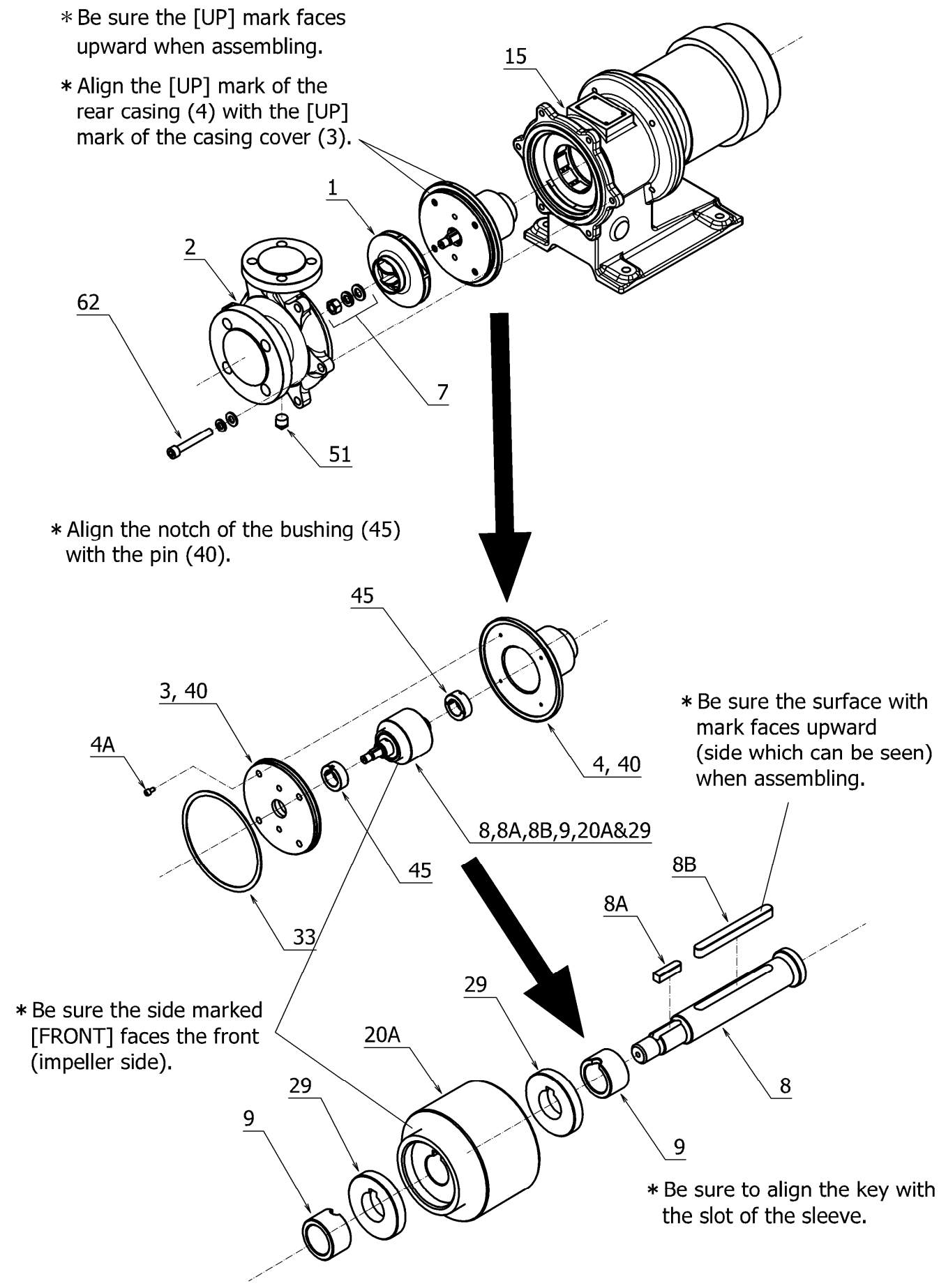

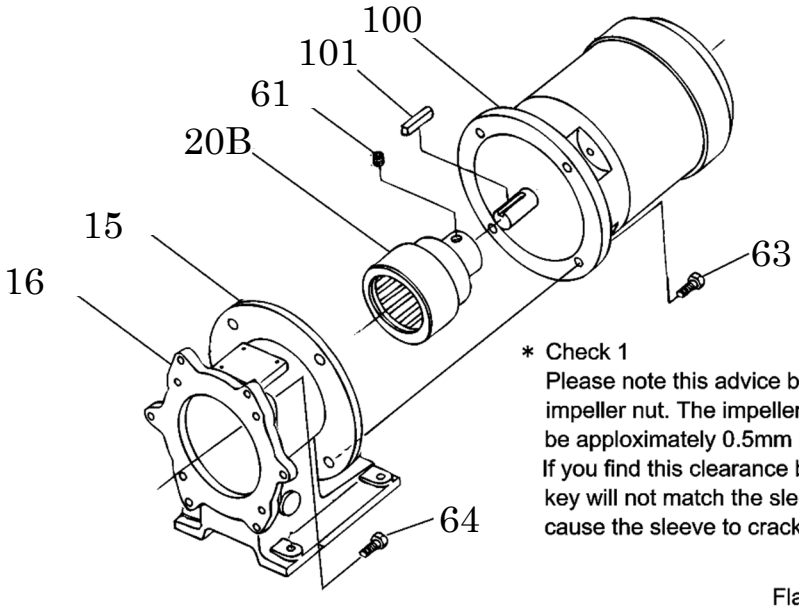

* Check 1
Please note this advice before fastening the impeller nut. The impeller shaft end (Ⓐ) must be approximately 0.5mm behind the impeller boss. If you find this clearance by 1.5mm or more, the key will not match the sleeve key slot, and may cause the sleeve to crack when fastened tightly.

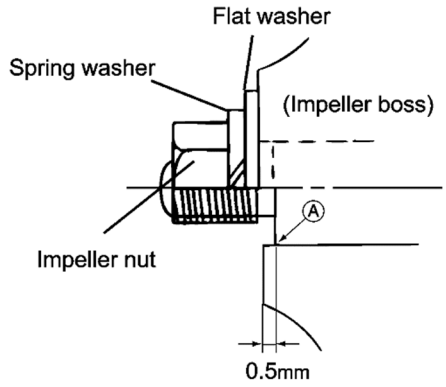

* Check 2
Fasten the impeller nut by correct manner tightly. Then, impeller will rotate smoothly and have about 0.5mm play on shaft direction.

⚠ ATTENTION

- **If pumping hazardous chemicals, be sure to wash the pump thoroughly after draining the liquid. A small amount of liquid will however remain in the screw, faucet joint and engaged parts inside the pump. If handling hazardous chemicals, be sure to wear protective equipment such as glasses and rubber gloves, and proceed with caution while disassembling the pump.**
- **Be careful of the powerful pull of the magnet. When removing part, be careful not to relax your grip until safely out of range of the magnetic force.**
- **Be careful when handling the thin can of the rear casing.**
- **Be sure to note the orientation of the inner coupling shaft when assembling. The end marked [FRONT] should face the front.**
- **The opened type impeller has sharp edges. When assemble or disassemble the pump, you should use the gloves to not get hurt.**

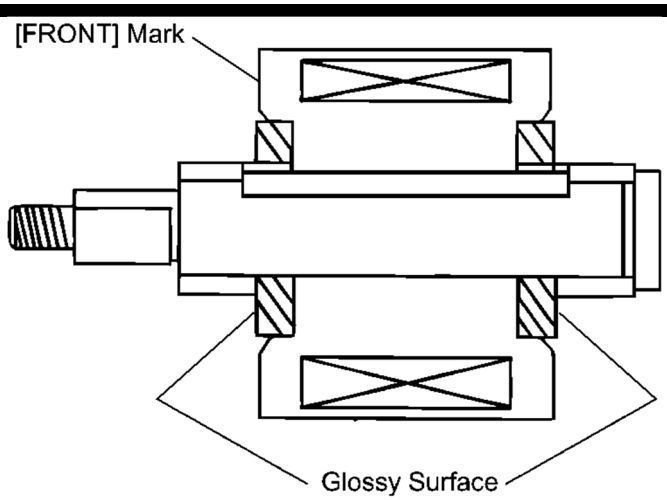

⚠ ATTENTION

- **The polished surface of the thrust rings should face outward.**

- **Use the suitable tools for assembly/disassembly in explosion hazard area. (EN1127-1 ANNEX A) And use the tools which are not attracted to magnet.**
- **When assembling, [UP] mark of casing cover and rear casing must faces upward. (The bypass-hole of casing cover must be poisoned up and down.) Otherwise rear casing will not be full filled by pump liquids. Then an ignition source can develop due to heat input.**
- **The bypass-hole of casing cover and center-hole of shaft must be cleaned and not be interrupted. Otherwise the flow into the rear casing will be low. Then an ignition source can develop due to heat input. Because the heat by eddy-current and the journal bearing does not be cooled.**
- **When assembling, be sure that the rotary parts rotate smoothly by turning motor's fan by hand before operating.**

For MP 4215, 4220,4220LF,5430,5225LF,8415,8420,8515,8420HF,8525HF

Disassembly Order	Part No.	Part	Important Suggestions	Assembly Order
1	65	Hexagon head bolt		35
2	51	Plug	Completely drain liquid from the casing.	34
3	62	Hexagon head bolt	Tighten each bolt equally when assembling	33
4	2	Casing	Pull out carefully and quietly.	32
5	64	Hexagon head bolt		31
6	1～4	Impeller and rear casing	Screw the two casing bolts (62) into the screw holes on the casing cover and lift out by pulling with force. The casing cover is attracted by magnetic force, so be extremely careful not to relax your grip until it is completely out of reach of the magnetic force. The can of the rear casing is very thin. Be careful not to damage it while handling.	30
7	15	Frame adapter and motor		29
8	33	Sheet gasket		28
9	7A	Set screw	Use hexagonal socket wrench.	27
10	7	Impeller nut	Uses right-hand threads: Turn to the left to loosen.	26
11	1	Impeller	Use two levers in case the impeller gets too tight. Check the inside of impeller. When impeller is clogging, cooling flow for bearing will be lower.	25
12	4A	Hexagon socket head bolt		24
13	3	Casing cover	If the case is hard to remove, drive the casing bolts (62) further and use as a push bolt. The casing cover is marked with [UP].	23
14	45	Bushing		22
(15)	40	Screw	No need to disassemble.	21
16	8～20A	Inner magnet coupling	The side marked [FRONT] is the impeller side.	20
17	4	Rear casing		19
18	45	Bushing		18
(19)	40	Screw	No need to disassemble.	17
20	8A	Impeller key	Material mark should face upward.	16
21	9	Sleeve		15
22	29	Thrust ring		14

Disassembly Order	Part No.	Part	Important Suggestions	Assembly Order
23	8D	Set screw	Use hexagonal socket wrench.	13
24	8C	Sleeve bolt		12
25	9	Sleeve		11
26	29	Thrust ring		10
27	20A	Inner magnet coupling	Powerful magnetic force requires attention.	9
28	8	Shaft	Be sure that the center-hole is clean and not be interrupted	8
29	8B	Coupling key	Material mark should face upward.	7
30	40	Screw		6
31	63	Hexagon head bolt		5
32	100	Motor		4
33	61	Set screw	Use hexagonal wrench for M8 screw.	3
34	20B	Outer magnet coupling		2
35	101	Motor shaft key		1

※Points to ponder when mounting Magnet coupling (M)

1. Check the dimension.

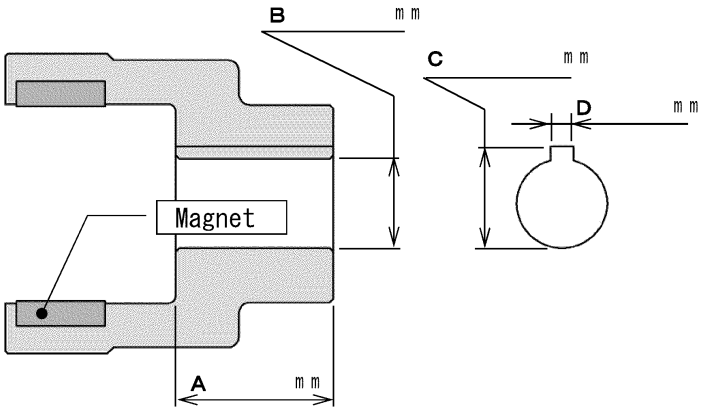

2. Points to ponder.

2-1 When it's difficult to mount, please lubricant the shaft with oil or other lubricant. Tapping magnet coupling (M) directly prohibited. Doing so may break the magnet.

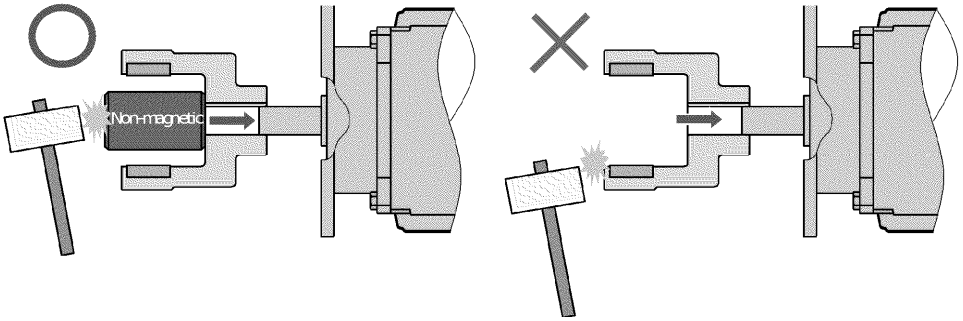

2-2 please insert motor shaft accurately parallel to magnet coupling (M). Nothing so may result in scratch or crank on the motor shaft.

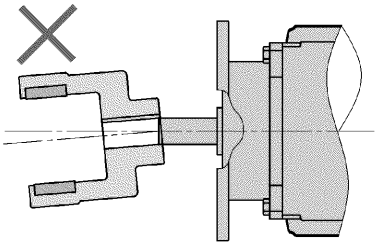

2-3 please make sure that the motor shaft end is straight (flush) with the inside bottom of magnet coupling (M).

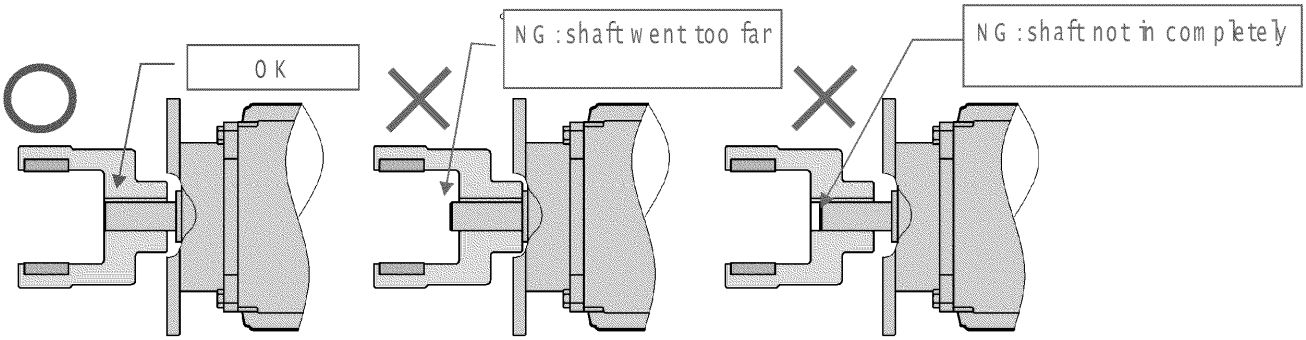

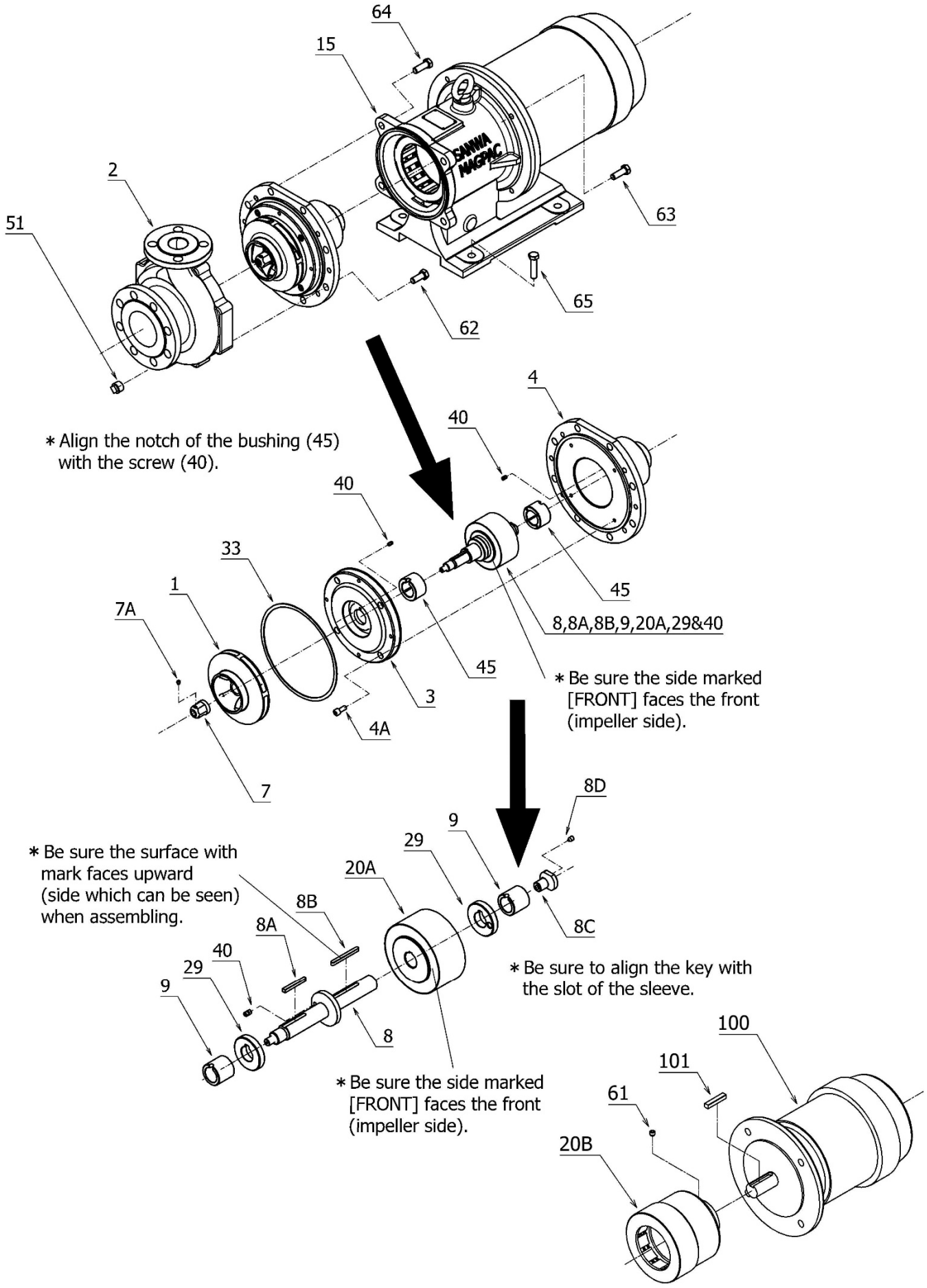
64
15
2
51
63
65
62
4
40
* Align the notch of the bushing (45) with the screw (40).
40
33
1
7A
45
8,8A,8B,9,20A,29&40
* Be sure the side marked [FRONT] faces the front (impeller side).
3
4A
7
8D
9
29
20A
* Be sure the surface with mark faces upward (side which can be seen) when assembling.
8B
8A
8C
40
29
9
* Be sure to align the key with the slot of the sleeve.
8
* Be sure the side marked [FRONT] faces the front (impeller side).
100
101
61
20B

⚠ ATTENTION

- **If pumping hazardous chemicals, be sure to wash the pump thoroughly after draining the liquid. A small amount of liquid will however remain in the screw, faucet joint and engaged parts inside the pump. If handling hazardous chemicals, be sure to wear protective equipment such as glasses and rubber gloves, and proceed with caution while disassembling the pump.**
- **Be careful of the powerful pull of the magnet. When removing part, be careful not to relax your grip until safely out of range of the magnetic force.**
- **Be careful when handling the thin can of the rear casing.**
- **Be sure to note the orientation of the inner coupling shaft when assembling. The end marked [FRONT] should face the front.**
- **The opened type impeller has sharp edges. When assemble or disassemble the pump, you should use the gloves to not get hurt.**



- **Use the suitable tools for assembly/disassembly in explosion hazard area. (EN1127-1 ANNEX A) And use the tools which are not attracted to magnet.**
- **When assembling, [UP] mark of casing cover and rear casing must faces upward. (The bypass-hole of casing cover must be poisoned up and down.) Otherwise rear casing will not be full filled by pump liquids. Then an ignition source can develop due to heat input.**
- **The bypass-hole of casing cover and center-hole of shaft must be cleaned and not be interrupted. Otherwise the flow into the rear casing will be low. Then an ignition source can develop due to heat input. Because the heat by eddy-current and the journal bearing does not be cooled.**
- **When assembling, be sure that the rotary parts rotate smoothly by turning motor's fan by hand before operating.**

4.Checking parts dimension and clearance gap

- **If the clearance between rotating and stationary components is out of limitation, it may happen that these component contact and resulting frictional heat entail excessive temperatures.**

Check the following dimensions, when disassembled. If measured dimension exceed the allowance, replace damaged parts by new original spare parts.

▪Dimension of Journal bearing (mm)

PUMP SIZE	BUSHING		SLEEVE	THRUST RING
	L	D	d	T
210,220,221,222 420,421,541,542	14.6～15.1	ϕ25.04～ ϕ25.27	ϕ25～ ϕ24.779	6.6～7
4215,4220,4220LF,5430 5225LF,8415,8420 8515,8420HF,8525HF	29.6～30.1	ϕ32.080～ ϕ32.342	ϕ31.775 ～ϕ32	9.6～10.1

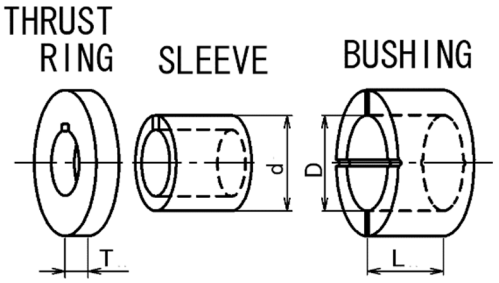

▪Gap/Clearance of Journal bearing (mm)

PUMP SIZE.		tf	tr	Pf	Pr
ALL	Gap	0	0.5	0.05	0.05
	allowance	0	1.0	0.2	0.2

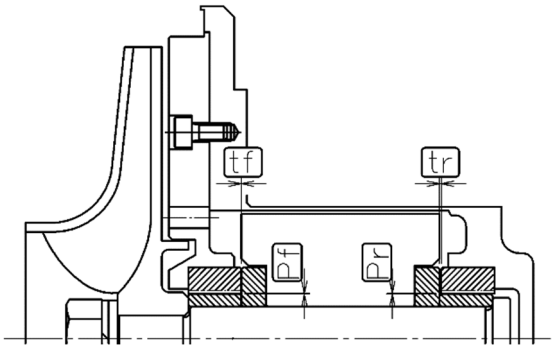

▪ **Clearance between Impeller and casing**

"CLOSED IMPELLER"

D and D' (㎜)	Z and Z' (㎜)
～φ80	0.475～0.525
φ90～	0.525～0.575

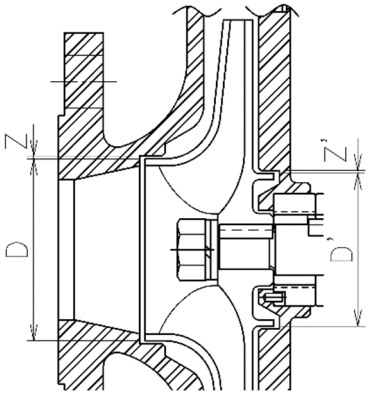

"OPEN IMPELLER"

Pump Size	X (㎜)	X' (㎜)	X" (㎜)
ALL	0.6～1.4	0.7～1.3	At 0

X" means clearance between Bushing(front) and Thrust ring(front).

- **Open impeller's clearances (X and X') has priority over Gap of journal bearing. In case of that open impeller's clearance is out of allowance by wear of bearing, replace bushing or thrust ring with new spare parts, even if they are within allowance range. Otherwise the possibly of contact between impeller and casing, and the risk of ignition.**

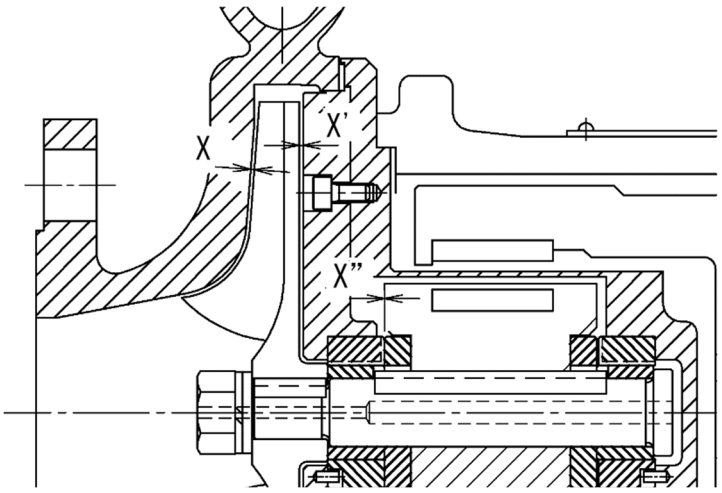

5. Optimal Tightening Torque for Bolts and Nuts

Part No.	7	4A	61	62	64
Part / Pump Size	Impeller nut	Hexagon socket head	Set screw	Casing bolts (hexagon socket head bolt)	Flange bolts (hexagon head bolt)
210, 220 221, 222 420, 421 541, 542	M12/ 29.4N•m (3.0kgf•m)	M5/ 2.8N•m (0.29kgf•m)	M8/ 6.0N•m (0.61kgf•m)	M10/ 24.0N•m (2.45kgf•m)	M10/ 24.0N•m (2.45kgf•m) (MH,ML Only)

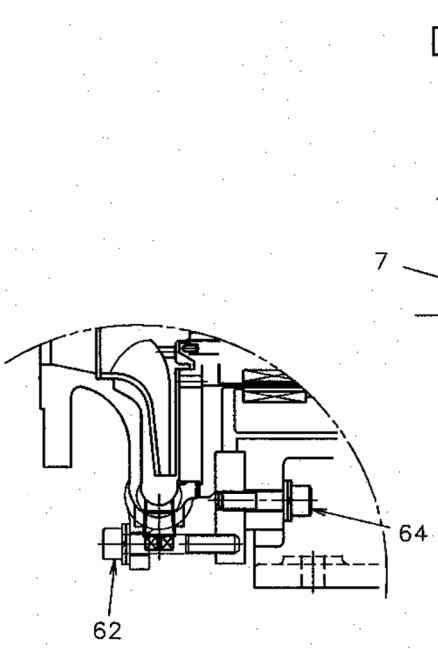

(MH/MHO,ML/MLO)

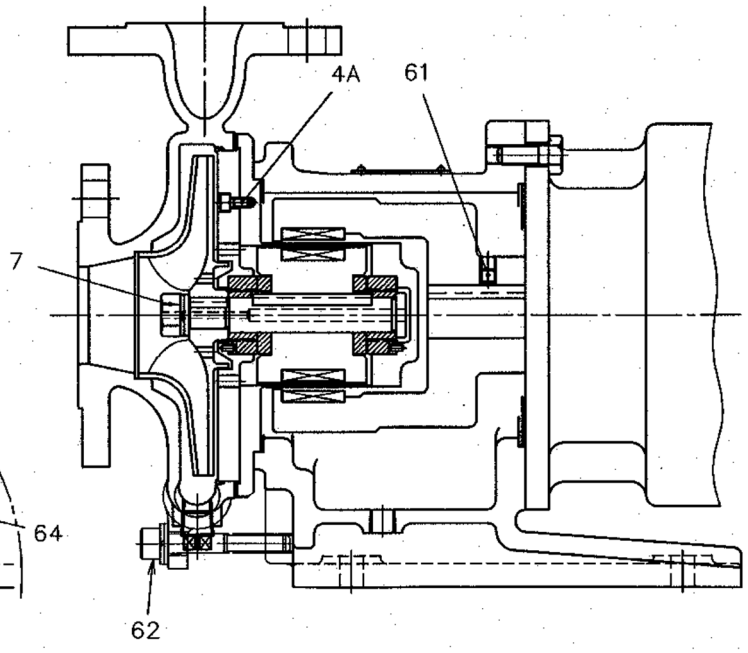

(MP)

Part No.	7	7A	8C	8D	4A	61	62	64
Part / Pump Size	Impeller nut	Screw (Impeller nut)	Sleeve bolt	Screw (Sleeve bolt)	Hexagon socket head	Set screw	Casing bolts (hexagon head bolt)	Flange bolts (hexagon head bolt)
4215 4220 4220LF 5430 5225LF 8415 8420 8515 8420HF 8525HF	M18/ 102.9N•m (10.5 kgf•m)	M6/ 2.4N•m (0.24 kgf•m)	M14/ 45.1N•m (4.6 kgf•m)	M6/ 2.4 N•m (0.24 kgf•m)	M8/ 12.0N•m (1.22 kgf•m)	M8/ 6.0N•m (0.61 kgf•m)	M12/ 42.1N•m (4.3 kgf•m)	M12/ 42.1N•m (4.3 kgf•m)

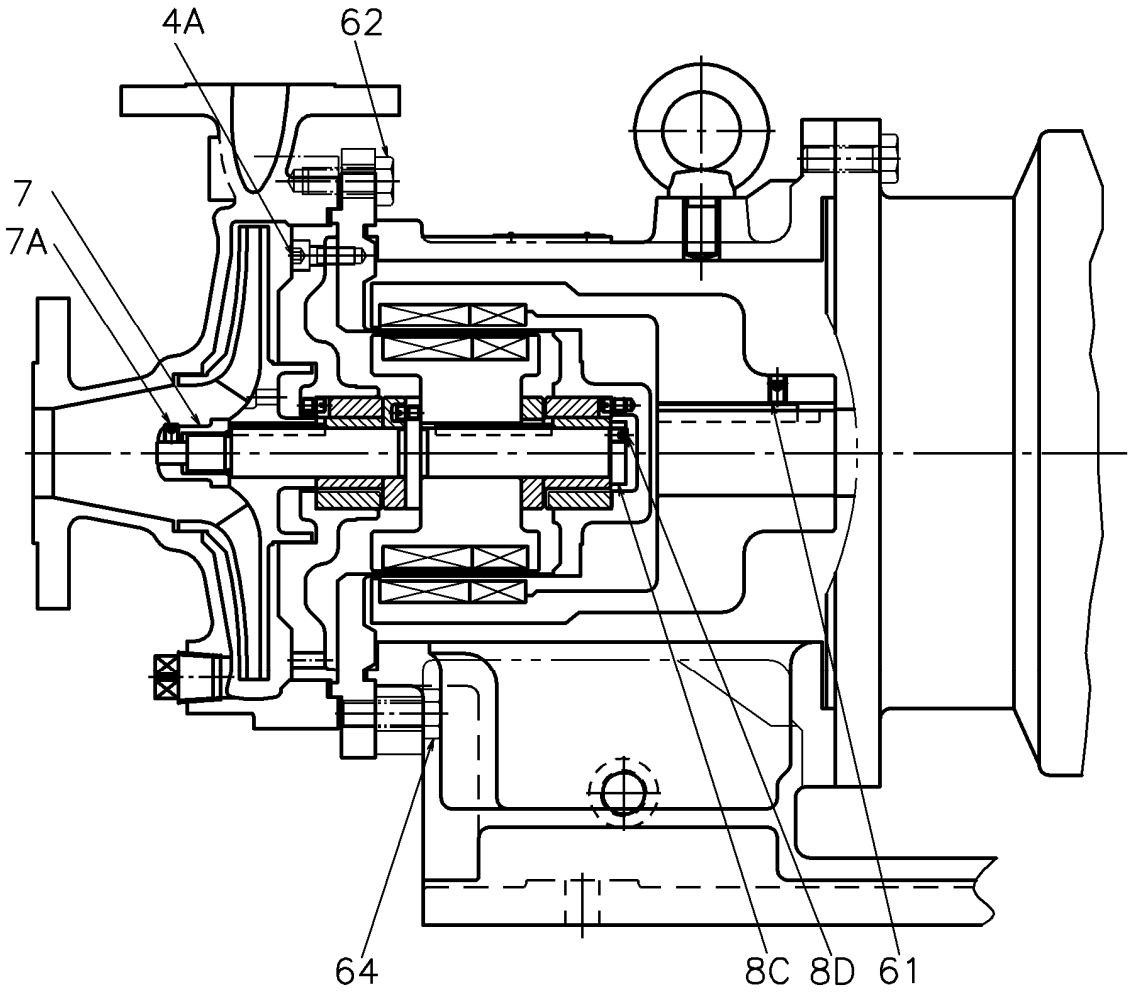

●Troubleshooting

The following table contains the causes and countermeasures for typical problems that may occur. You may refer to the table when there seems to be something wrong with your pump. (Items particular to magnet pumps are indicated by a circle (○).

Problem	Possible Causes	Countermeasures
Pump won't start	● Motor not operating properly	● Repair motor.
	● Wrong power supply	● Inspect.
	● Foreign matters in rotating parts	● Disassemble and repair.
	● Foreign matters caught in sliding part	● Remove foreign matter
	○ Damaged SiC bearing etc.	○ Disassemble and replace SiC bearing.
Magnet coupling slip	○ Demagnetization	○ Change the coupling.
	○ Specific gravity or viscosity of liquid is too high.	○ Replace with high torque coupling.
	○ Power source voltage is too high.	
	○ Motor output is too high.	○ Replace with proper motor.
Liquid is initially discharged but soon stops.	● Priming is inadequate.	● Prime the pump properly.
	● Air is being sucked in.	● Check the suction piping.
	● Head of liquid suction is too high.	● Lower the head of liquid suction.
	○ Magnet coupling is slipping.	○ See item concerning magnet decoupling.
Specified liquid discharge or head cannot be obtained.	● Strainer or foot valve is clogged with foreign matter.	● Disassemble strainer or foot valve for cleaning.
	● Clogged impeller	● Remove foreign matter
	● Air is being sucked in.	● Check the suction piping.
	● Rotation is in reverse.	● Interchange of two leads of 3-phase motor.
	● Piping loss is too large.	● Reconsider planning.
	● Liquid is volatile or is too hot.	
	● Cavitation	● Checking suction condition
	● Clogged piping	● Remove foreign matter from piping
	● Speed is too low.	● Checking indication of tachometer.
	● Voltage drop	● Checking power source
	● Discharge port of supply tank is blocked.	● Remove foreign matters

Problem	Possible Causes	Countermeasures
Overloading	● Head of liquid is too low or too much discharge flow rate.	● Throttle discharge valve.
	● Specific gravity or viscosity of liquid is too high.	● Reconsider planning.
	● Irregular contact at rotating part	● Repair or replace part.
	○ Damaged SiC bearings	○ See item concerning SiC bearings.
Pump vibrates and produces noise.	● Clogged impeller	● Remove foreign matter
	● Cavitation	● Checking suction condition
	● Too much discharge flow rate.	● Throttle discharge valve.
	● Rotation is in reverse.	● Check wiring connections.
	● Resonation of piping	● Improve the piping arrangement.
	● Irregular contact at rotating part	● Be repaired by specified factory.
	● Shut off operation performed for extended period of time	● Stop shut off operation.
	● Damaged bearing	● Replace bearings.
	○ Magnet coupling slipping	○ See item concerning magnet slipping.
	○ Damaged SiC bearings	○ See item concerning SiC bearings.
Demagnetization	○ No-load operation	○ Change coupling.
	○ Shut off operation performed for extended period of time	
	○ Operation with magnet coupling slipping with coagulated liquid	
SiC bearing damage	○ No-load operation (forgot to introduce pumping liquid, forgot to open suction valve, checked rotation direction without introducing pumping liquid, etc.)	○ Replace SiC bearing
	○ Operation started without complete discharge of air inside of the pump.	
	○ Shut off operation performed for extended period of time	
	○ Cavitation	○ Modify piping and check
	○ Solid or other foreign matter caught in SiC bearing.	○ Clean and replace SiC bearing
	○ Operating with coagulated liquid	

● Repairs and Warranty

Sanwa Hydrotech Corporation provides repair and maintenance service for your Sanwa Magnet Drive Pump. Terms and conditions of repair and warranty are stated thereto:

1. Warranty Repair
   Equipment failure and/or damage resulting from defective design or workmanship shall be repaired at no cost to the owner. This warranty repair shall not cover failure and/or damage of equipment resulting from improper usage, long-term storage, natural disasters, accidents or unauthorized modification/attachment on/to the equipment.

2. Repair With Charge
   The following repairs or parts replacements are available for a fee:
   2−1) Equipment failure or damage occurring after the period of guarantee expires
   2−2) Equipment failure or damage occurring as a result of improper usage or long-term storage
   2−3) Equipment failure or damage occurring as a result of natural disaster, fire or unpreventable accident
   2−4) Equipment failure or damage occurring as a result of repairs or modifications performed by anyone other than Sanwa Hydrotech Corp., or contractor appointed by Sanwa Hydrotech Corp.,

3. Sanwa Hydrotech Corporation shall not assume responsibility for expenses or damage incurred as a result of failure of this product while being used.

If you have any questions concerning the product you have purchased, please contact the shop where you purchased it.

MANUFACTURE：**SANWA HYDROTECH**
JAPAN
SANWA HYDROTECH CORPORATION
OVERSEAS BUSINESS DEPT.
No. 11-13, MINAMIKANEDEN 2－CHOME, SUITA, OSAKA　564-0044, JAPAN
PHONE：+81－6－6330－5984
FAX：　+81－6－6330－5975
E-mail：sxobd@sanwapump.co.jp
Web SITE at：www.sanwapump.com

LOCAL REPRESENTATIVE：

Manufacturer : SANWA HYDROTECH CORPORATION

No. MPMPO01C(E)/2301ATEX