Air Operated Double Diaphragm Pumps

TC-X030HT/050HT

¼” High Purity Virgin PTFE / PFA AODD Pumps Data Sheet

Max. Flow Rate: (030HT) 8.5 l/min (050HT) 11 l/min
Max. Discharge Pressure: 0.50 MPa
Max. Slurry Size: 0 mm
Max. Suction Lift: Dry: 1.0 m Wet (Primed): 8.0 m
Liquid Connection Size: ¼”
Liquid Connection Configuration: Threaded Side Ports
Pump Wetted Material Options: PTFE / PFA
Air Motor Material: PPS (Ryton Plastic)
Diaphragm Options: PTFE
Check Valve Configuration: Flat Type Check Valves
Air Motor Model: Looped C Spring Air Spool
Exhaust Configuration: Internal Air Exhaust Silencer
Base & Footprint: PVC Legs & Rubber Feet



TC-X050HT
¼” High Purity PTFE Pump
11 l/min Max

Standard 030HT / 050HT Pump Specifications		
Pump Model	**030HT**	**050HT**
Max. Flow Rate	8.5 l/min [2.2 GPM]	11 l/min [2.9 GPM]
Max. Discharge Vol. Per Cycle	10 ml	13 ml
Max. Solids Size	0 mm	
Supply Air Pressure Range	0.2 - 0.5 MPa [30 - 70 psi]	
Max. Discharge Pressure	0.5 MPa [70 psi]	
Max. Air Consumption	170 l/min (ANR) [6.0 SCFM]	
Max. Suction Lift	Dry: 1.0 m Wet (Primed): 8.0 m	
Connections: Manifold / Air	¼” Threaded Side Ports / ¼” Rc Ball valve	
Check Valve Configuration	Flat Type Check Valves	
Wetted Body Material	High Purity PTFE (Polytetrafluoroethylene)	
Diaphragm Material	High Purity PTFE (Polytetrafluoroethylene)	
Flat Valve, Seat & Guide Material	High Purity PTFE (Polytetrafluoroethylene)	
Wetted Centre Discs Material	High Purity PFA encapsulated SUS316 (Perfluoroalkoxy alkane)	
Liquid Seals Material	High Purity PTFE (Polytetrafluoroethylene)	
Ambient Temp. Range	0 - 70°C [32 - 158°F]	
Liquid Temp. Range	0 - 80°C [32 - 176°F]	
Max. Noise Level	71 dB (ISO 1996 A weighted Sound Pressure)	
Net Weight	3.4 kg [7.5 lbs]	

Note: *Factors affecting a pumps stated liquid flow rate, suction lift & solids handling capabilities include, but are not limited to; pump size, diaphragm, ball valve & ball seat, type & materials of construction, air inlet pressure & air flow capability, liquid viscosity, specific gravity, slurry content, ambient & liquid temperature, liquid inlet & liquid outlet width, piping type, piping length & overall piping configuration. A minimum supply air pressure of 30 PSI (0.2 MPa) is required to operate the pump.*

Pump Performance Curves

030HT Curves

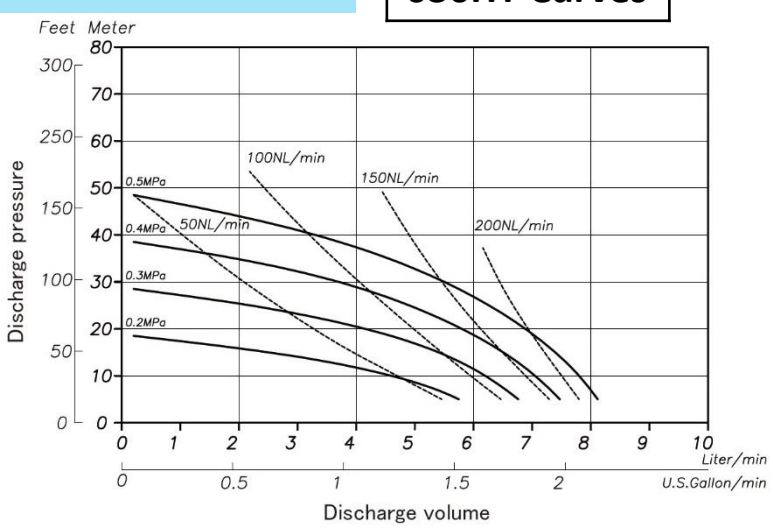

050HT Curves

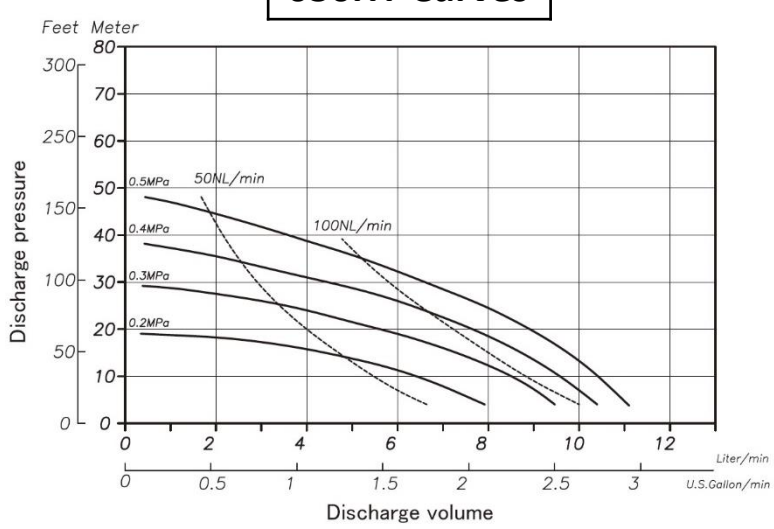

For more information about TC-X Pumps please contact: sales@iwaki.de
WWW.IWAKI.DE

Air Operated Double Diaphragm Pumps

IWAKI AIR EUROPE

Wetted Materials Of Construction

MODEL	030HT	050HT
Pump Wetted Parts	PTFE/PFA	
Diaphragm	PTFE	
Valve Stopper	PTFE	
Flat Valve	PTFE	
Valve Seat	PTFE	
Center Disk	PFA	
Weight	3.4 kg (7.5 lbs)	3.4 kg (7.5 lbs)



Note: US FED STD 209E Cleanroom Standards Class 1000, equivalent to ISO6

Dimensional Drawings

030HT・050HT

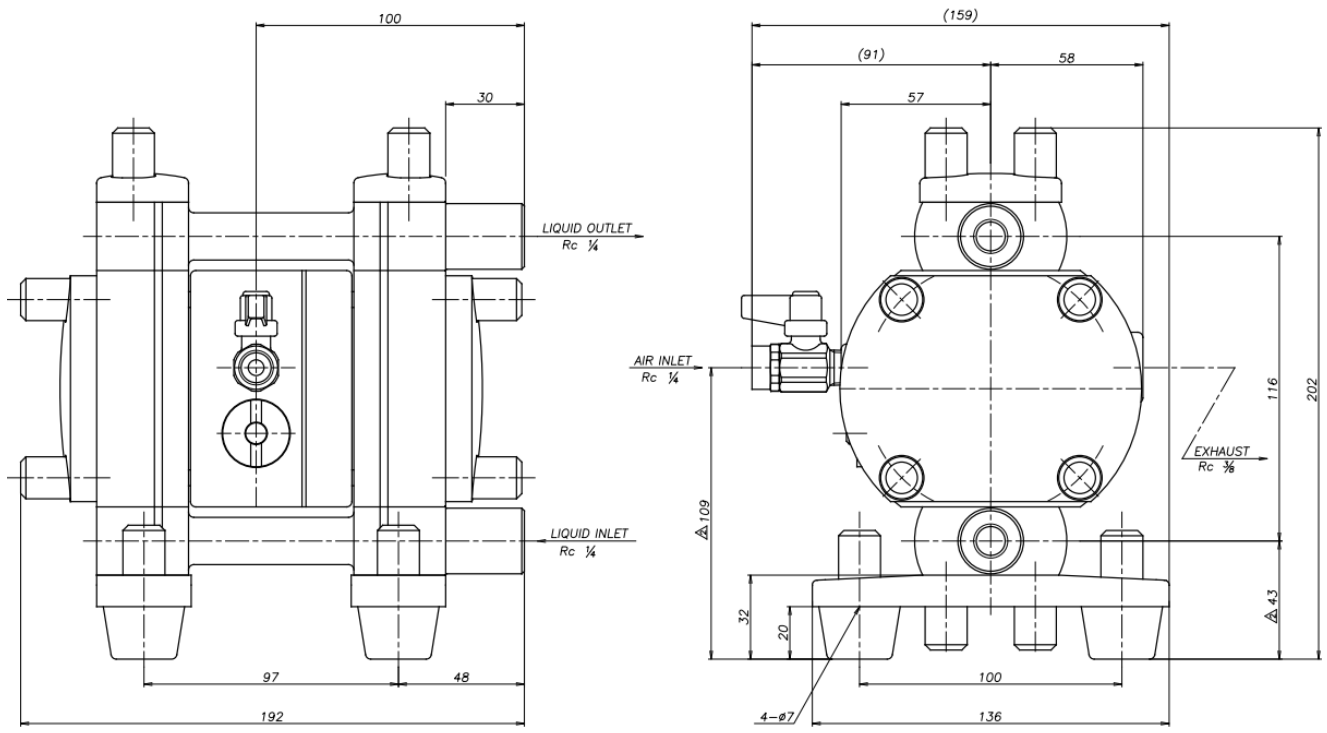

Nomenclature

Series TC-X | 050 | H | T | N - X (Special Options)

- 050: Pump Connection Size
  030 (¼") E/L not required
  050 (¼")
- H: Pump Body Material (Wetted)
  H: High Purity PTFE
  Clean Room Class 1000
- T: Diaphragm Material
  T: PTFE
- N: Connection Type
  ☐: Rc
  N: NPT

AODD Pump Capabilities

Self Priming	Variable Discharge Pressures	Inherently Safe Design
Run Dry	Transfer Liquid Slurries	Portable & Easy to Use
Run up to Dead Head	Transfer Large Sized Solids	Transfer Viscous Fluids
Variable Flow Rates	Handle Abrasives	Frequent Start Stop Operation
Shear Sensitivity	Transfer Chemicals	Powered by Compressed Air

CE LoopedC

Ex II2G ExhIIBT5Gb「0°C<Ta<70°C」
II2D ExhIIIBT100°CDb「0°C<Ta<70°C」

For more information about TC-X Pumps please contact: sales@iwaki.de
WWW.IWAKI.DE

JQA-QMA14279 091