TC-X031 Plastic E/L not required

¼" Plastic Diaphragm Pump Data Sheet

Max. Flow Rate: 8 l/min
Liquid Connections: ¼" Female Side-ports
Max. Slurry Size: 0 mm
Max. Suction Lift: Dry: 4.5 m Wet (Primed): 8.0 m
Max. Discharge Pressure: 0.7 MPa
Check Valve Configuration: Flat Valves, PTFE
Pump Wetted Material Options: CFPVDF
Diaphragm Options: PTFE
Air Motor Material: PPG Plastic
Description: Special Low Flow ¼" Plastic AODD Pumps available in CFPVDF, Looped C-Spring Air Spool, One-piece PPG Air Motor, Female threaded Side Port Connections, PTFE Diaphragms & Flat Check Valves, Reinforced PP Base, Internal Exhaust Silencer.



TC-X031VT
¼" CFPVDF Pump
8 l/min.

031 Plastic Pump Specifications	
Pump Model / Material	**VT**
Max. Flow Rate	8 l/min [2.1 GPM]
Max. Solids Size	0 mm
Max. Discharge Pressure	0.7 MPa [100 psi]
Supply Air Pressure Range	0.2 - 0.7 MPa [30 - 100 psi]
Max. Suction Lift	Dry: 4.5 m Wet (Primed): 8.0 m
Max. Air Consumption	250 l/min (ANR) [8.83 SCFM]
Max. Discharge Volume Per Cycle	15 ml
Ambient Temperature Range	0 - 70°C [32 - 158°F]
Liquid Temperature Range	0 - 60°C [32 – 140°F]
Connections: Manifolds / Air	¼" Rc Female Threaded Side Ports / ¼" Rc Ball valve

Note: *Factors affecting a pumps stated liquid flow rate, suction lift & solids handling capabilities include, but are not limited to; pump size, diaphragm, ball valve & ball seat, type & materials of construction, air inlet pressure & air flow capability, liquid viscosity, specific gravity, slurry content, ambient & liquid temperature, liquid inlet & liquid outlet width, piping type, piping length & overall piping configuration. A minimum supply air pressure of 30 PSI (0.2 MPa) is required to operate the pump..*

Pump Performance Curves

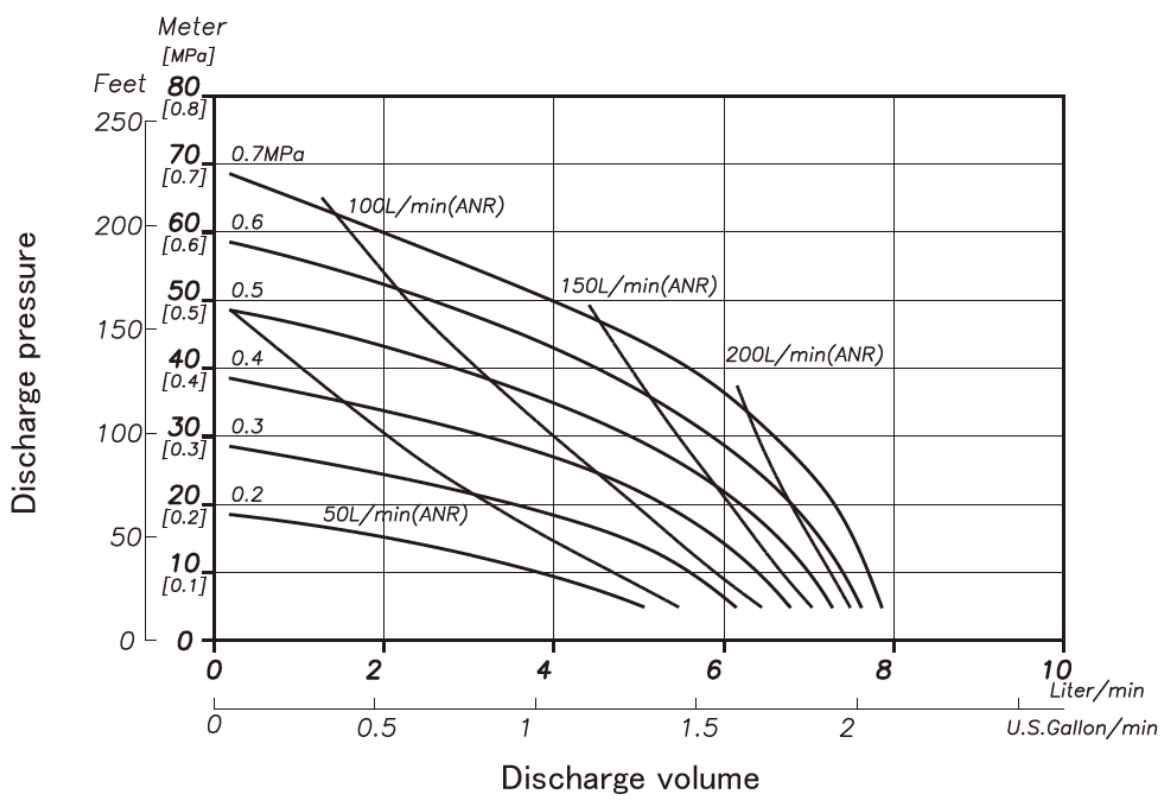



Looped C® Air Spool
New Generation Spring Assisted Non-Centring Spool, Newly Improved with SUS Non-Centring Looped C® Springs, Original Ekonol® Seal Rings, Strengthened Spring Retainer and SUS Spool Shaft, Outside Accessible, Modular Spool Sleeve, Modern Long-life Materials of Construction, Oil & Grease Lubrication Free Design

For more information about TC-X Pumps please contact: sales@iwaki.de
WWW.IWAKI.DE

Air Operated Double Diaphragm Pumps

IWAKI AIR EUROPE

Wetted Materials Of Construction

MODEL	031VT [031VTN]
Pump Wetted Parts	PVDF
Diaphragm	PTFE
Valve Stopper	PVDF
Flat Valve	PTFE
Valve Seat	PVDF
Center Disk	PVDF
Weight	1.5 kg [3.3 lbs]



PPG Air Motor

Dimensional Drawings

031VT

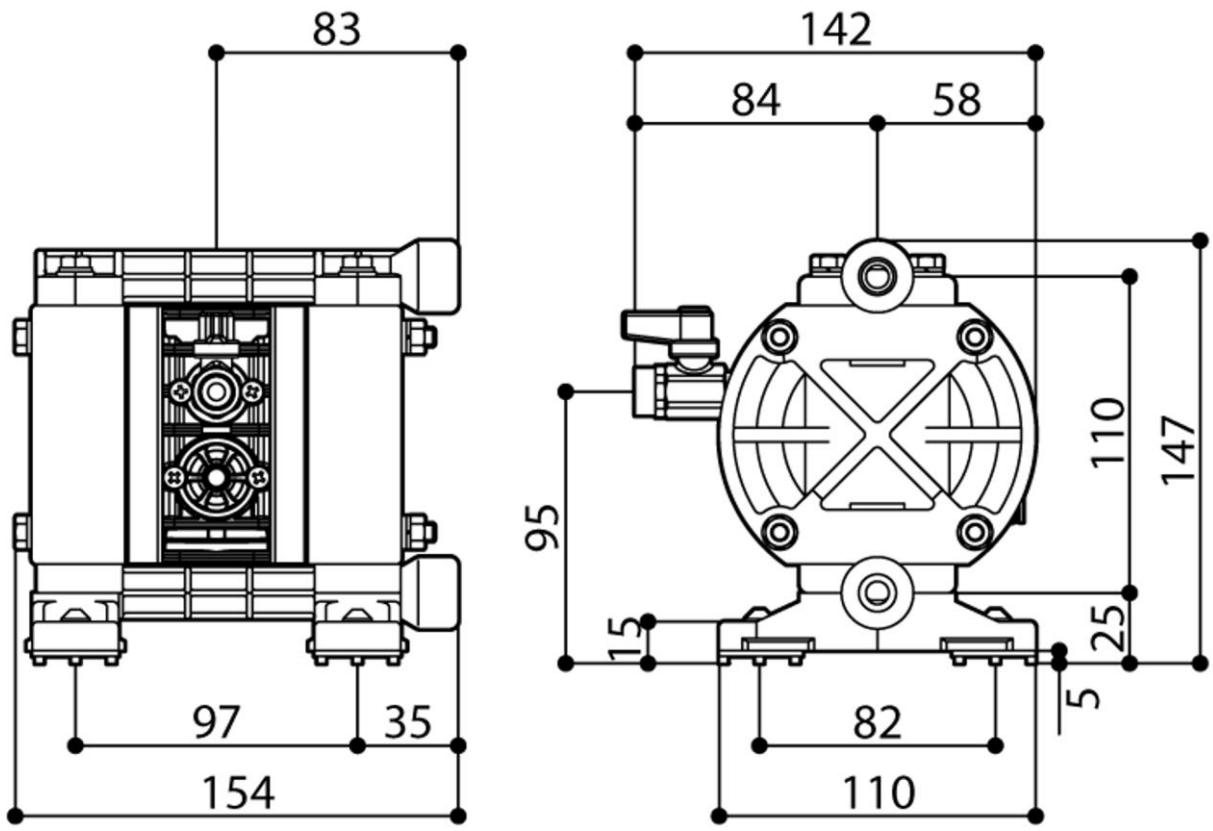

Nomenclature

Series TC-X | 031 | V | T | N - X — Special Options

- 031: Pump Connection Size 031 (¼") E/L not required
- V: Pump Body Material (Wetted) V: CFPVDF
- T: Diaphragm Material T: PTFE
- N: Connection Type ☐: Rc N: NPT

AODD Pump Capabilities

Self Priming	Variable Discharge Pressures	Inherently Safe Design
Run Dry	Transfer Liquid Slurries	Portable & Easy to Use
Run up to Dead Head	Transfer Large Sized Solids	Transfer Viscous Fluids
Variable Flow Rates	Handle Abrasives	Frequent Start Stop Operation
Shear Sensitivity	Transfer Chemicals	Powered by Compressed Air

CE LoopedC

Ex II2G ExhIIBT5Gb「0°C<Ta<70°C」
II2D ExhIIIBT100°CDb「0°C<Ta<70°C」

For more information about TC-X Pumps please contact: sales@iwaki.de
WWW.IWAKI.DE

JQA-QMA14279

091