Air Operated Double Diaphragm Pumps

IWAKI AIR EUROPE

TC-X050

¼" Diaphragm Pump Data Sheet

Max. Flow Rate: 11.5 l/min
Liquid Connections: ¼" Female Side-ports / Multiports on Pure PP
Max. Slurry Size: 0 mm (with Flat Valves)
Max. Suction Lift: Dry: 3.5 m Wet (Primed): 8.0 m
Max. Discharge Pressure: 0.7 MPa
Check Valve Configuration: Flat Valves PTFE (Optional Ball Valves on Metallic Pumps)
Pump Wetted Material Options: Al, SUS, PP, CFPVDF, DELRIN, CFPP
Diaphragm Options: PTFE
Air Motor Material: PPS
Description: ¼" AODD Pumps available in a large range of materials, Looped C-Spring Air Spool, Ryton Plastic (PPS) Air Motor Section, Female Threaded Side Port Connections & Multiports on Pure PP, Flat Check Valves, PTFE Diaphragms, Internal Silencer



TC-X050ST
¼" SUS Pump.

050 Pump Specifications		
Pump Model / Material	**AT ST**	**CT DT GT PT VT**
Max. Flow Rate	11.5 l/min [3.0 GPM]	
Max. Solids Size	0 mm / 0.5 mm Ball Valve Version	
Max. Discharge Pressure	0.7 MPa [100 PSI]	
Max. Suction Lift	Dry: 3.5 m Wet (Primed): 8.0 m	
Supply Air Pressure Range	0.2 - 0.7 MPa [30 - 100 PSI]	
Max. Air Consumption	250 l/min (ANR) [8.83 SCFM]	
Max. Discharge Volume Per Cycle	29 ml	
Ambient Temperature Range	0 - 70°C [32 – 158°F]	
Liquid Temperature Range	0 - 100°C [32 – 212°F] *	0 - 60°C [32 - 140°F]
Connections: Maninifolds / Air	¼" Rc Female Threaded Side-Ports _ Multi-Ports on Pure PP (PT) Model / ¼" Rc Ball valve	

*Operating in the condition a fluid temperature is at 70°C or above might cause an early degradation of performance and required to change the material of air motor seal parts. Please contact your nearest distributor for details.

Note. *Factors affecting a pumps stated liquid flow rate, suction lift & solids handling capabilities include, but are not limited to; pump size, diaphragm, ball valve & ball seat, type & materials of construction, air inlet pressure & air flow capability, liquid viscosity, specific gravity, slurry content, ambient & liquid temperature, liquid inlet & liquid outlet width, piping type, piping length & overall piping configuration. A minimum supply air pressure of 30 PSI (0.2 MPa) is required to operate the pump.*

Pump Performance Curves

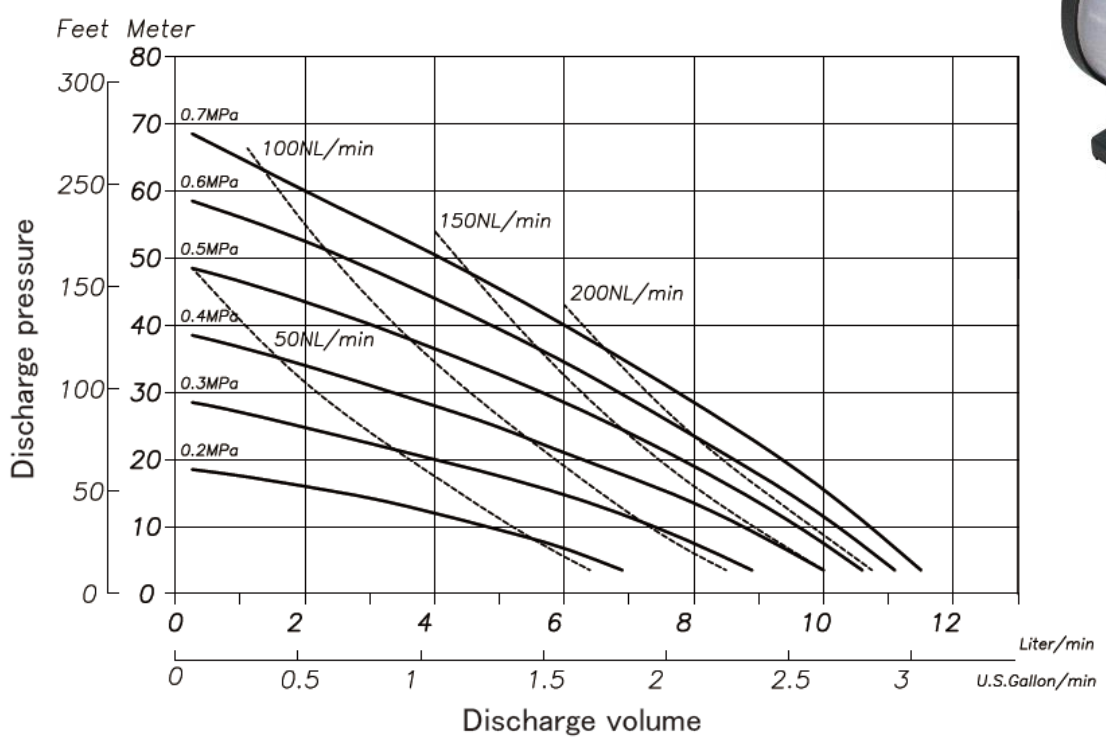



TC-X050PT
¼" PP Pump.



TC-X050GT
¼" GFRPP Pump.

For more information about TC-X Pumps please contact: sales@iwaki.de
WWW.IWAKI.DE

Air Operated Double Diaphragm Pumps

IWAKI AIR EUROPE

Wetted Materials Of Construction

MODEL	050AT (ATN)	050ST (STN)	050PT (PTN)	050VT (VTN)	050DT (DTN)	050GT (GTN)	050CT (CTN)
Pump Wetted Parts	ADC12	SCS14	PP	CFPVDF	POM	PPG	CFPP
Diaphragm	PTFE						
Valve Stopper	SUS316	SUS316	PP	CFPVDF	POM	PPG	CFPP
Flat Valve	PTFE						
Valve Seat	SUS316	SUS316	PP	CFPVDF	POM	PPG	CFPP
Center Disk	SUS316	SUS316	PP	CFPVDF	POM	PPG	CFPP
Weight	1.6 kg (3.51 lbs)	2.7 kg (6.0 lbs)	1.3 kg (2.91 lbs)	1.7 kg (3.7 lbs)	1.4 kg (3.1 lbs)	1.3 kg (2.91 lbs)	1.3 kg (2.91 lbs)

Dimensional Drawings

050 AT ST

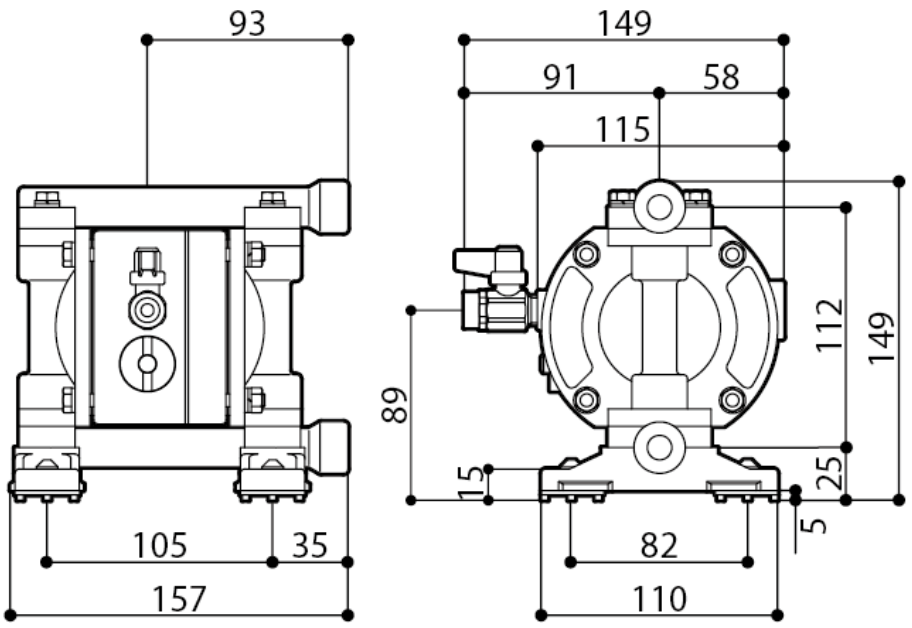

050PT, CT **DT, GT&VT (Only side connections)**

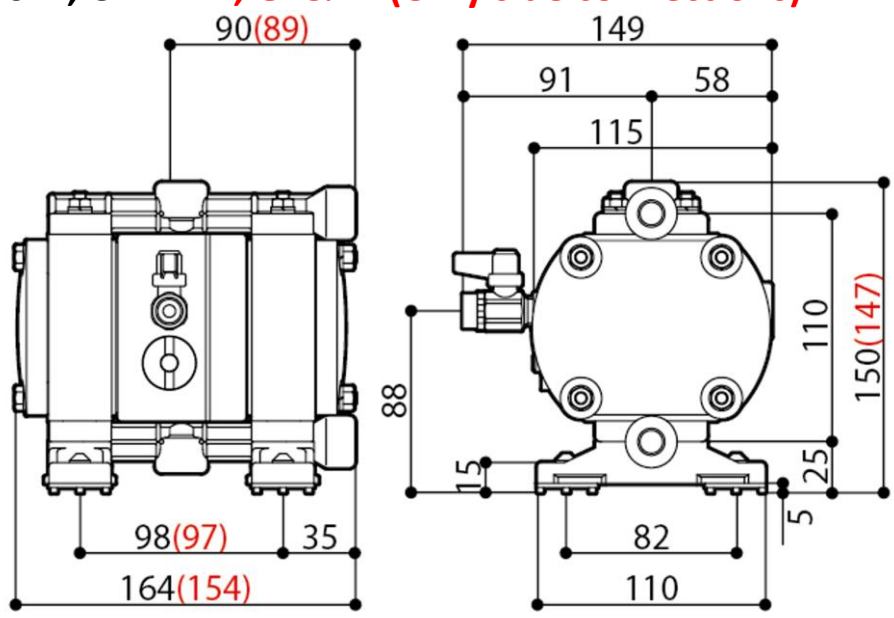

Pump Nomenclature

Series — TC-X | 050 | P | T | N | - | X — Special Options

- 050: Pump Connection Size 050 (¼")
- P: Pump Body Material (Wetted)
  - A: Al
  - S: SUS
  - G: PPG
  - P: PP
  - V: CFPVDF
  - D: Delrin/POM
  - C: CFPP
- T: Diaphragm Material — T: PTFE
- N: Connection Type — ☐: Rc, N: NPT



TC-X050VT
¼" CFPVDF Pump



TC-X050DT
¼" Delrin/POM Pump



TC-X050AT
¼" Aluminium Pump



TC-X050ST incl. Drum Kit
¼" SUS Drum Pump

AODD Pump Capabilities

- Self Priming
- Run Dry
- Run up to Dead Head
- Variable Flow Rates
- Shear Sensitivity
- Variable Discharge Pressures
- Transfer Liquid Slurries
- Transfer Large Sized Solids
- Handle Abrasives
- Transfer Chemicals
- Inherently Safe Design
- Portable & Easy to Use
- Transfer Viscous Fluids
- Frequent Start Stop Operation
- Powered by Compressed Air

CE LoopedC

Ex II2G ExhIIBT5Gb「0°C<Ta<70°C」
II2D ExhIIIBT100°CDb「0°C<Ta<70°C」

For more information about TC-X Pumps please contact: sales@iwaki.de
WWW.IWAKI.DE

JQA-QMA14279

091