Air Operated Double Diaphragm Pumps

TC-X050HTT

¼” High Temperature AODD Pump Data Sheet

Max. Flow Rate: 11 l/min
Max. Discharge Pressure: 0.50 MPa
Max. Slurry Size: 0 mm
Max. Suction Lift: Dry: 1.0 m Wet (Primed): 2.0 m
Liquid Connection Size: Tube Ø10 x Ø12 L100
Liquid Connection Configuration: Tubing
Pump Wetted Material: PFA
Air Motor Material: PPS (Ryton Plastic)
Diaphragm Options: PTFE
Check Valve Configuration: Flat Type Check Valves
Air Motor Model: Looped C-Spring Air Spool
Exhaust Configuration: Internal Air Exhaust Silencer
Base & Footprint: PPS Legs & Rubber TPO Feet



TC-X050HTT
¼” High Temperature Pump
11 l/min Max

Standard 050HTT Pump Specifications

Pump Model	050HTT
Max. Flow Rate	11 l/min [2.9 GPM]
Max. Discharge Vol. Per Cycle	13 ml
Max. Solids Size	0 mm
Supply Air Pressure Range	0.2 - 0.5 MPa [30 - 70 psi]
Max. Discharge Pressure	0.5 MPa [70 psi]
Max. Air Consumption	170 l/min (ANR) [6.0 SCFM]
Max. Suction Lift	Dry: 1.0 m Wet (Primed): 2.0 m
Connections: Manifolds / Air	Ø10 x Ø12 xL100 tube / ¼” Rc Ball valve
Check Valve Configuration	Flat Type Check Valves
Wetted Body Material	PFA (Perfluoroalkoxy alkane)
Diaphragm Material	PTFE (Polytetrafluoroethylene)
Valve Seat, valve Stopper Material	PFA(Perfluoroalkoxy alkane)・PTFE (Polytetrafluoroethylene)
Valve Guide, Flat valve	PTFE (Polytetrafluoroethylene)
Wetted Centre Discs Material	PFA (Perfluoroalkoxy alkane)
Liquid Seals Material	Tubing / PFA
Ambient Temp. Range	0 - 70°C [32 - 158°F]
Liquid Temp. Range	0 - 150°C [32 - 302°F]
Max. Noise Level	71 dB (ISO 1996 A weighted Sound Pressure)
Net Weight	2.3 kg [5.1 lbs]

Note: *Factors affecting a pumps stated liquid flow rate, suction lift & solids handling capabilities include, but are not limited to; pump size, diaphragm, ball valve & ball seat, type & materials of construction, air inlet pressure & air flow capability, liquid viscosity, specific gravity, slurry content, ambient & liquid temperature, liquid inlet & liquid outlet width, piping type, piping length & overall piping configuration. A minimum supply air pressure of 30 PSI (0.2 MPa) is required to operate the pump.*

Pump Performance Curve

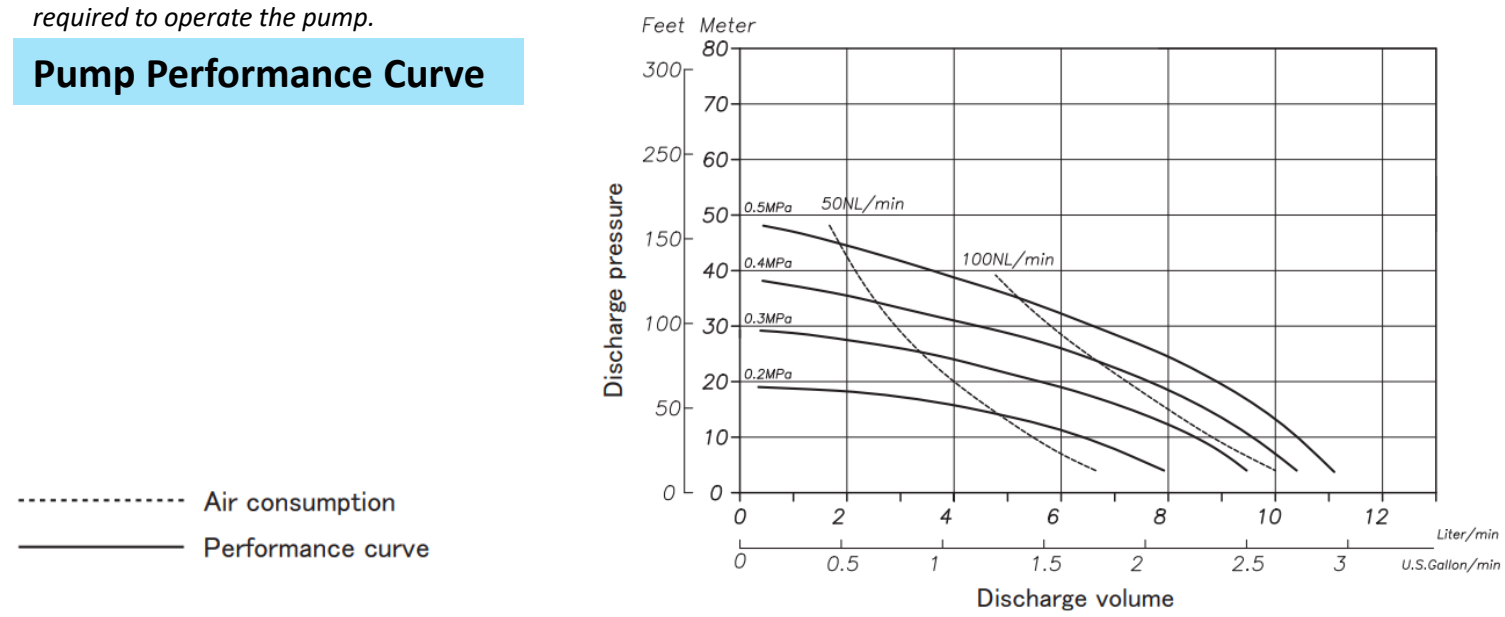

For more information about TC-X Pumps please contact: sales@iwaki.de
WWW.IWAKI.DE

Air Operated Double Diaphragm Pumps

IWAKI AIR EUROPE

Wetted Materials Of Construction

MODEL	050HTT-X
Pump Wetted Parts	PFA
Diaphragm	PTFE
Valve Stopper	PTFE
Flat Valve	PTFE
Valve Seat	PTFE
Center Disk	PFA



Dimensional Drawings

TC-X050HTT

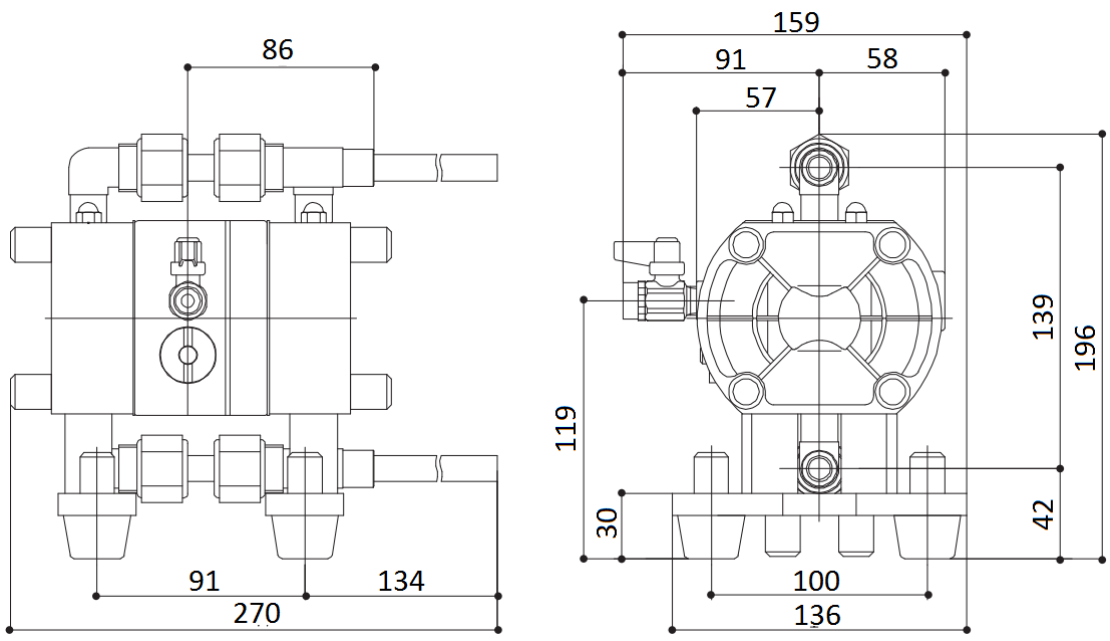

Nomenclature

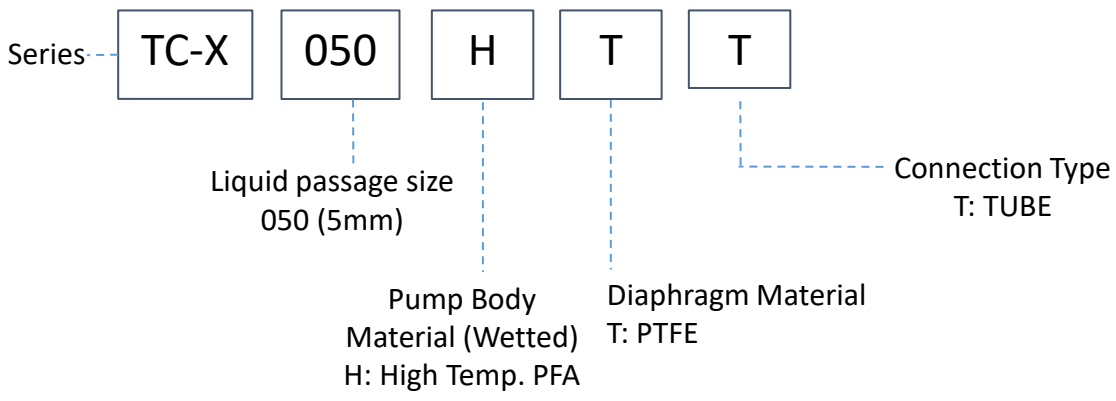

AODD Pump Capabilities

Self Priming	Variable Discharge Pressures	Inherently Safe Design
Run Dry	Transfer Liquid Slurries	Portable & Easy to Use
Run up to Dead Head	Transfer Large Sized Solids	Transfer Viscous Fluids
Variable Flow Rates	Handle Abrasives	Frequent Start Stop Operation
Shear Sensitivity	Transfer Chemicals	Powered by Compressed Air

CE LoopedC

Ex II2G ExhIIBT5Gb「0°C<Ta<70°C」
II2D ExhIIIBT100°CDb「0°C<Ta<70°C」

For more information about TC-X Pumps please contact: sales@iwaki.de
WWW.IWAKI.DE

JQA-QMA14279

091