Air Operated Double Diaphragm Pumps

IWAKI AIR EUROPE

TC-X100HT

⅜” High Purity Virgin PTFE Pumps Data Sheet

Looped C

Liquid Connection Size: ⅜”
Liquid Connection Configuration: Female Threaded / Flanged Side Ports
Pump Wetted Material Options: High Purity PTFE / PFA
Air Motor Material: PP (Pure Polypropylene Plastic)
Diaphragm Options: PTFE
Check Valve Configuration: Ball/Flat Check Valves
Air Motor Model: Looped C Spring Air Spool
Exhaust Configuration: External Air Exhaust Silencer
Torque Reinforcement Plates: PVC
Base & Footprint: PVC Base Plate & Rubber Feet

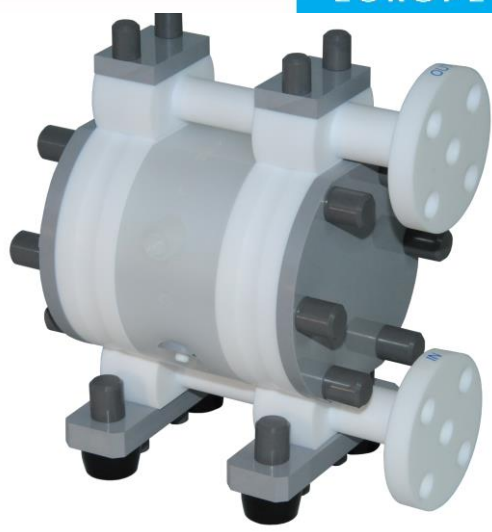

TC-X100HTJ
⅜” High Purity PTFE Pump
27 l/min Max

Standard 100HT Pump Specifications

Pump Model	100HT	100HTJ	100HT-FV	100HTJ-FV
Max. Flow Rate	27 l/min [7.15 GPM]			
Max. Discharge Vol. Per Cycle	65 ml			
Max. Solids Size	1.0 mm		0 mm	
Supply Air Pressure Range	0.2 - 0.5 MPa [30 - 70 psi]			
Max. Discharge Pressure	0.5 MPa [70 psi]			
Max. Air Consumption	210 l/min (ANR) [7.42 SCFM]			
Max. Suction Lift	Dry: 1.0 m Wet (Primed): 8.0 m		Dry: 2.0 m Wet (Primed): 8.0 m	
Inlet & Outlet Connections Air connection	⅜” Rc Threaded Side Ports ¼” Rc Ball valve	⅜” Rc Flanged Side Ports ¼” Rc Ball valve	⅜” Rc Threaded Side Ports ¼” Rc Ball valve	⅜” Rc Flanged Side Ports ¼” Rc Ball valve
Check Valve Configuration	Ball Type Check Valves		(FV) Flat Type Check Valves	
Wetted Body Material	High Purity PTFE (Polytetrafluoroethylene)			
Diaphragm Material	High Purity PTFE (Polytetrafluoroethylene)			
Flat Valve, Seat & Guide Material	High Purity PTFE (Polytetrafluoroethylene)			
Wetted Centre Discs Material	High Purity PFA encapsulated SUS316 (Perfluoroalkoxy Alkane)			
Liquid Seals Material	High Purity PTFE (Polytetrafluoroethylene)			
Ambient Temp. Range	0 - 70°C [32 - 158°F]			
Liquid Temp. Range	0 - 80°C [32 - 176°F]			
Max. Noise Level	82 dB (ISO 1996 A weighted Sound Pressure)			
Net Weight	7.2 kg [15.9 lbs]	8.2 kg [18.07 lbs]	7.2 kg [15.9 lbs]	8.2 kg [18.07 lbs]

Operation Note: *Factors affecting a pumps stated liquid flow rate, suction lift & solids handling capabilities include, but are not limited to; pump size, diaphragm, ball valve & ball seat, type & materials of construction, air inlet pressure & air flow capability, liquid viscosity, specific gravity, slurry content, ambient & liquid temperature, liquid inlet & liquid outlet width, piping type, piping length & overall piping configuration. A minimum supply air pressure is required to operate the pump.*

Pump Performance Curves

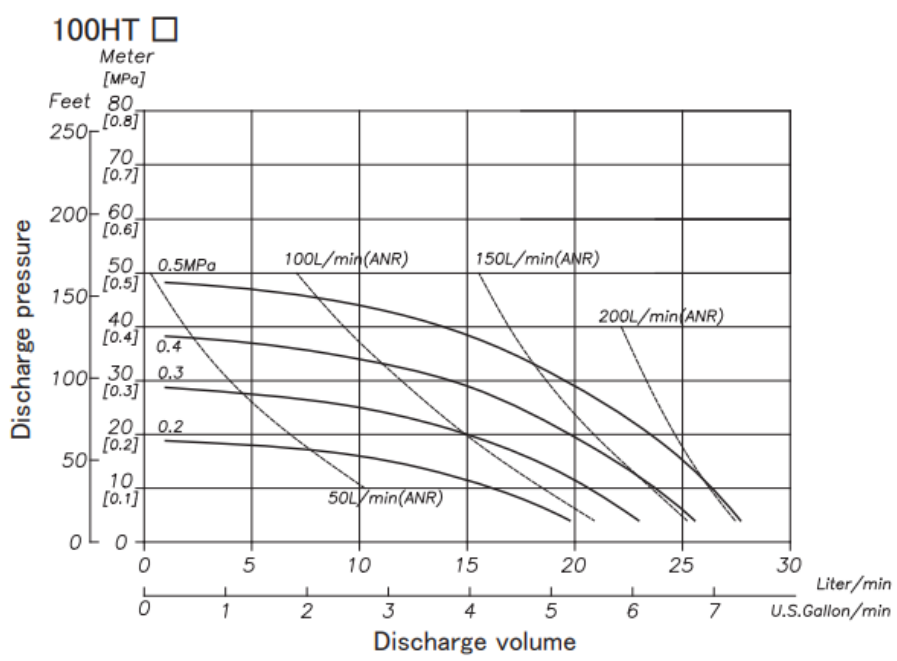

For more information about TC-X Pumps please contact: sales@iwaki.de
WWW.IWAKI.DE

Air Operated Double Diaphragm Pumps

IWAKI AIR EUROPE

Wetted Materials Of Construction

MODEL	100HT(-FV)	100HTJ(-FV)
Pump Wetted Parts	PTFE/PFA	
Diaphragm	PTFE	
Valve Stopper	PTFE	
Ball / Flat Valve(-FV)	PTFE	
Valve Seat	PTFE	
Center Disk	PFA	
Weight	7.2 kg (15.9 lbs)	8.2 kg (18.1 lbs)



TC-X100HT
⅜" High Purity PTFE Pump
27 l/min Max

Note: US FED STD 209E Cleanroom Standards Class 1000, equivalent to ISO6

Dimensional Drawings

TC-X100HTJ

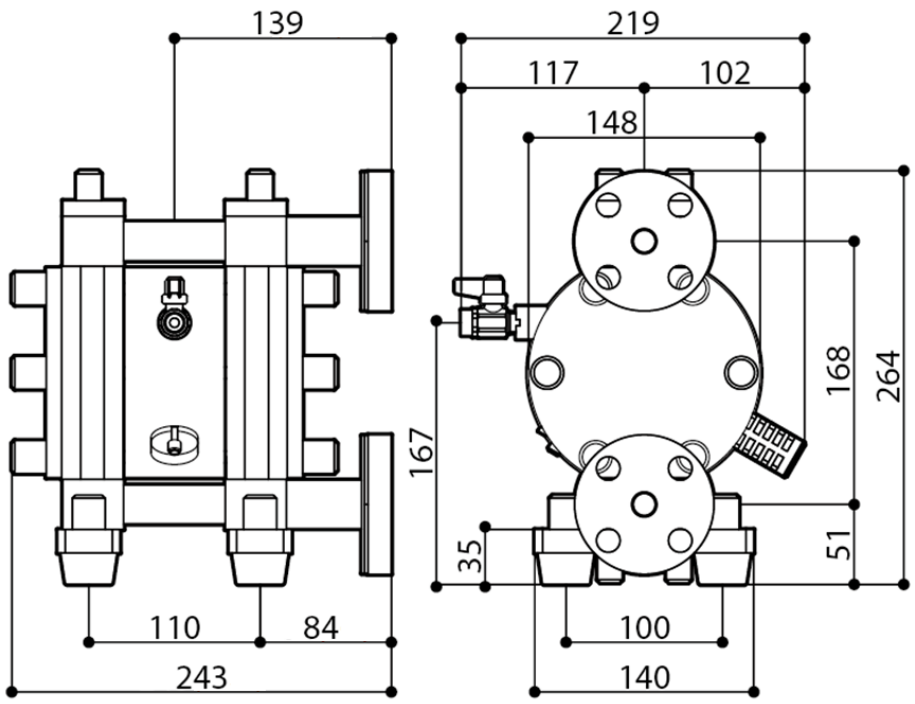

TC-X100HT

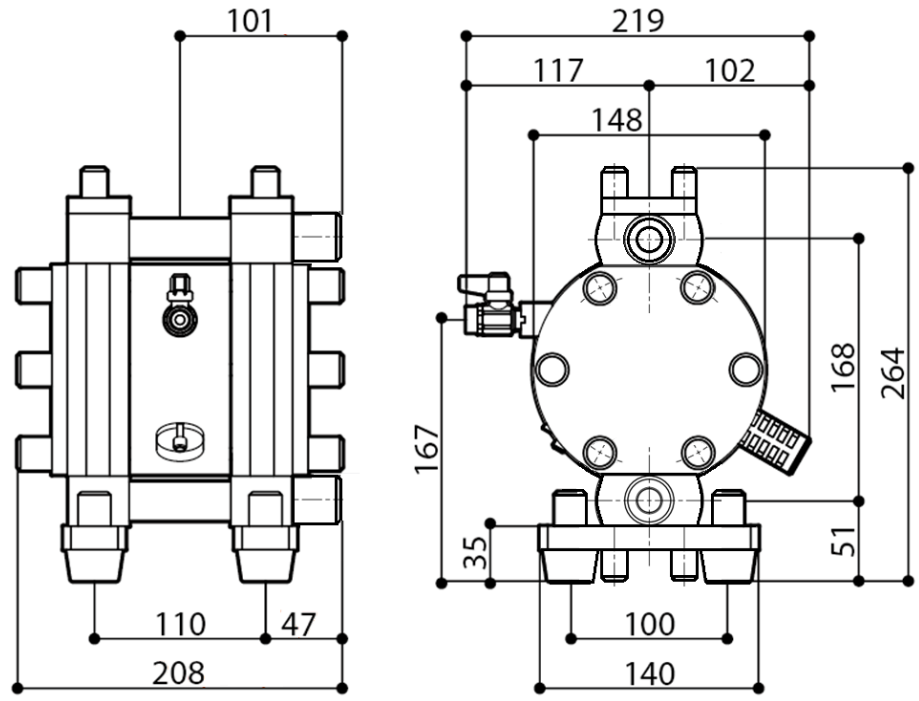

Nomenclature

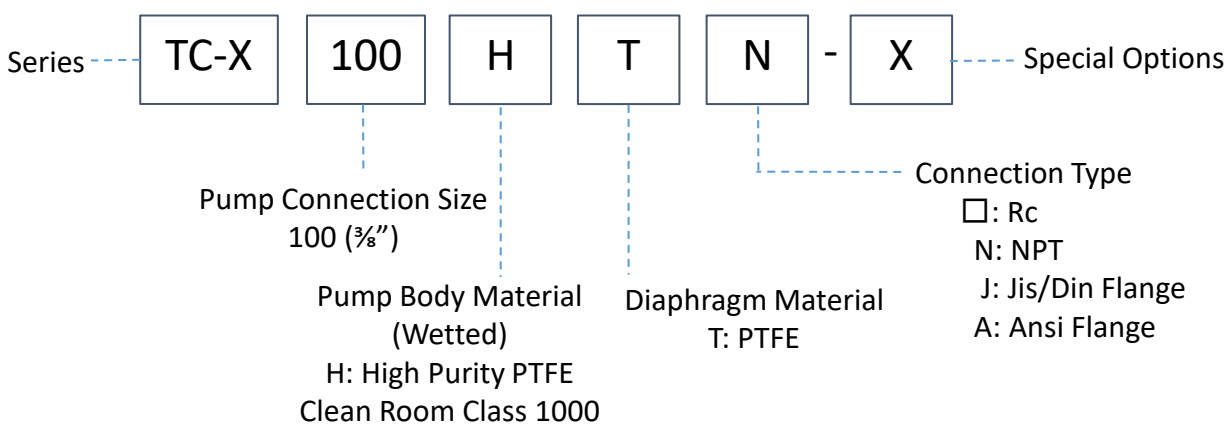

AODD Pump Capabilities

Self Priming	Variable Discharge Pressures	Inherently Safe Design
Run Dry	Transfer Liquid Slurries	Portable & Easy to Use
Run up to Dead Head	Transfer Large Sized Solids	Transfer Viscous Fluids
Variable Flow Rates	Handle Abrasives	Frequent Start Stop Operation
Shear Sensitivity	Transfer Chemicals	Powered by Compressed Air

CE LoopedC

Ex II2G ExhIIBT5Gb「0°C<Ta<70°C」
II2D ExhIIIBT100°CDb「0°C<Ta<70°C」

For more information about TC-X Pumps please contact: sales@iwaki.de
WWW.IWAKI.DE

JQA-QMA14279

091