TC-X101 Metallic

⅜” Metallic Diaphragm Pump Data Sheet

Max. Flow Rate: 24 l/min
Liquid Connections: ⅜” Female Multiports (Optional ½”)
Max. Slurry Size: 1.0 mm
Max. Suction Lift: Dry: 2.0 m Wet (Primed): 8.0 m
Max. Discharge Pressure: 0.7 MPa
Check Valve Configuration: Ball Valves
Pump Wetted Material Options: Aluminium, SUS
Diaphragm Options: PTFE-EPDM “W”, PTFE, CR, EPDM, NBR, TPEE, TPO
Air Motor Material: Aluminium
Description: ⅜” Metallic AODD Pumps available in AL & SUS, Spring-Less Air Spool, Aluminium Air Motor, Multi Port Threaded Connections, Ball Check Valves, External Plastic Silencer



TC-X101S□
⅜” SUS Pump.

101 Metallic Pump Specifications		
Pump Model / Material	**A□**	**S□**
Max. Flow Rate	24 l/min [6.3 Gallon/min]	
Max. Solids Size	1.0 mm or less	
Max. Discharge Pressure	0.7 MPa [100 PSI]	
Max. Suction Lift	Dry: 2.0 m Wet (Primed): 8.0 m	
Supply Air Pressure Range	0.2 - 0.7 MPa [30 - 100 PSI]	
Max. Air Consumption	260 l/min (ANR) [9.18 SCFM]	
Max. Discharge Volume Per Cycle	50 ml	
Ambient Temperature Range	0 - 70°C [32 - 158°F]	
Liquid Temperature Range	NBR/CR: 0 - 70°C TPEE/EDPM: 0 - 80°C FKM/TPO/PTFE 0 - 100°C *	
Connections: Manifolds / Air	⅜” Rc Female Threaded Multi-Ports / ¼” Rc Ball valve	

*Operating in the condition a fluid temperature is at 70°C or above might cause an early degradation of performance and required to change the material of air motor seal parts. Please contact your nearest distributor for details.

Note. *Factors affecting a pumps stated liquid flow rate, suction lift & solids handling capabilities include, but are not limited to; pump size, diaphragm, ball valve & ball seat, type & materials of construction, air inlet pressure & air flow capability, liquid viscosity, specific gravity, slurry content, ambient & liquid temperature, liquid inlet & liquid outlet width, piping type, piping length & overall piping configuration. A minimum supply air pressure of 30 PSI (0.2 MPa) is required to operate the pump..*

Pump Performance Curves

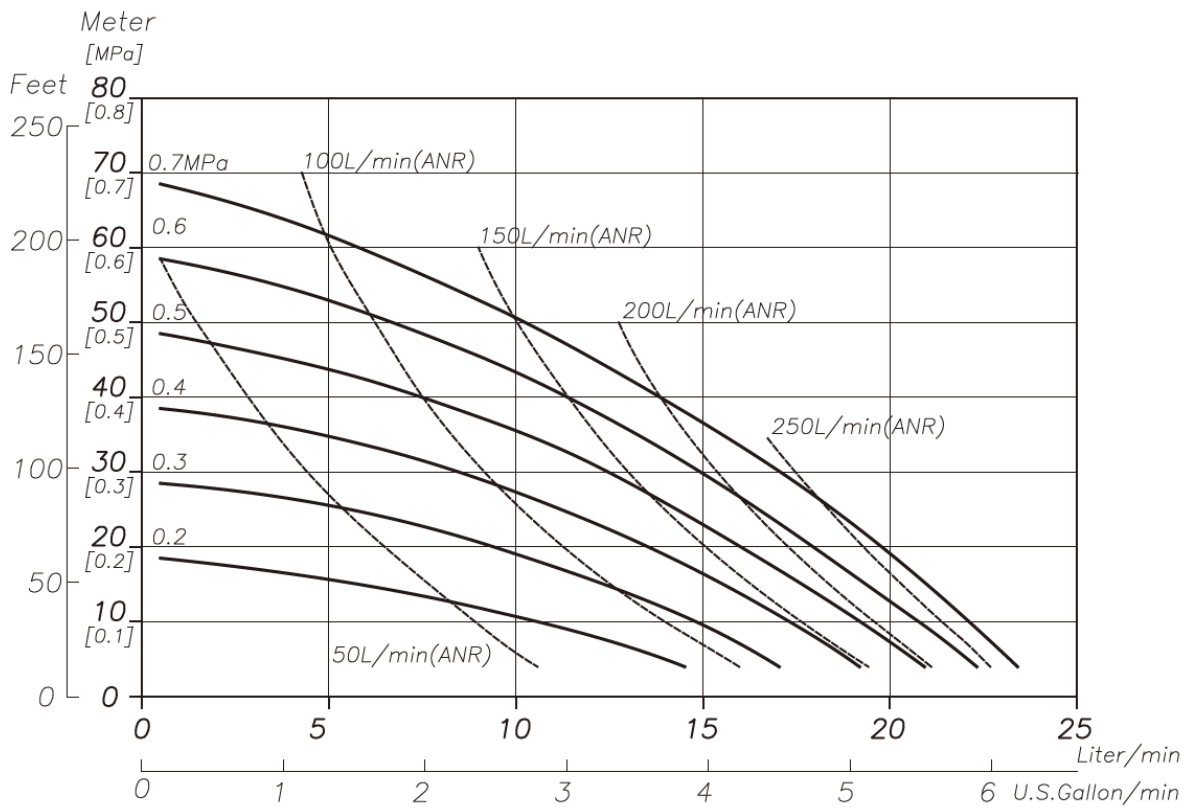



TC-X101A
⅜” Aluminium Pump.

For more information about TC-X Pumps please contact: sales@iwaki.de
WWW.IWAKI.DE

Air Operated Double Diaphragm Pumps

IWAKI AIR EUROPE

Wetted Materials Of Construction

MODEL	101AC (101ACN)	101AN (101ANN)	101AE (101AEN)	101AT (101ATN)	101AH (101AHN)	101AS (101ASN)	101AW (101AWN)	101SC (101SCN	101SN (101SNN)	101SE (101SEN)	101ST (101STN)	101SH (101SHN)	101SS (101SSN)	101SS (101SSN)	101SW (101SWN)
Pump Wetted Parts	ADC12							SCS14							
Diaphragm	CR	NBR	EPDM	PTFE	TPEE	TPO	PTFE-EPDM	CR	NBR	EPDM	PTFE	TPEE	TPO	TPO	PTFE-EPDM
Valve Stopper	PA							SCS14							
Ball Valve	CR	NBR	EPDM	PTFE	NBR	EPDM	PTFE	CR	NBR	EPDM	PTFE	NBR	EPDM	EPDM	PTFE
Valve Seat	A5056							SUS316							
Center Disk	A5056							SUS316							
Weight	3.4 kg (7.5 lbs)							5.1 kg (11.2 lbs)							

Dimensional Drawings

101A□・S□

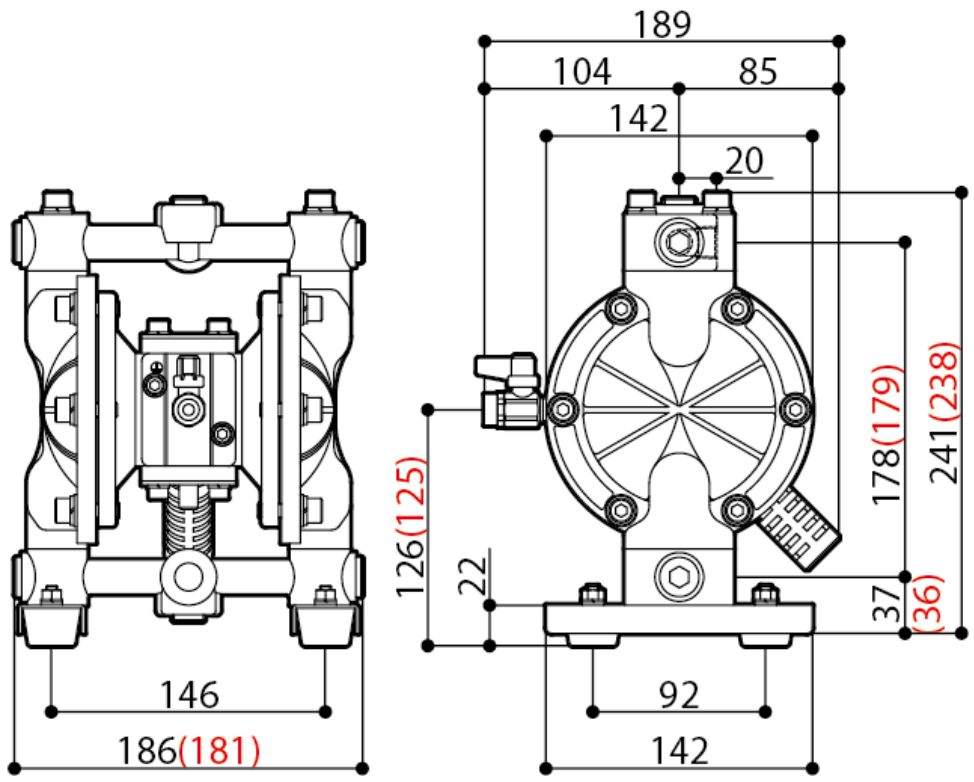

Nomenclature

Series TC-X | 101 | A | W | N | - | X — Special Options

- 101: Pump Connection Size 101(⅜")
- A: Pump Body Material (Wetted)
  - A: Al
  - S: SUS
- W: Diaphragm Material
  - W: PTFE-EPDM
  - T : PTFE
  - C : CR
  - E : EPDM
  - N : NBR
  - H : TPEE
  - S : TPO
- N: Connection Type
  - □: Rc
  - N: NPT



TC-X101S□
With Drum Kit

AODD Pump Capabilities

Self Priming	Variable Discharge Pressures	Inherently Safe Design
Run Dry	Transfer Liquid Slurries	Portable & Easy to Use
Run up to Dead Head	Transfer Large Sized Solids	Transfer Viscous Fluids
Variable Flow Rates	Handle Abrasives	Frequent Start Stop Operation
Shear Sensitivity	Transfer Chemicals	Powered by Compressed Air

CE LoopedC

Ex II2G ExhIIBT5Gb「0°C<Ta<70°C」
II2D ExhIIIBT100°CDb「0°C<Ta<70°C」

For more information about TC-X Pumps please contact: sales@iwaki.de
WWW.IWAKI.DE

JQA-QMA14279

091