TC-X101 Plastic

⅜” Plastic Diaphragm Pump Data Sheet

Max Flow Rate: 22 L/min.
Liquid Connections: ⅜” Female Centre Ports / Multiports. (Optional ½”)
Max Slurry Size: 1.0 mm.
Max Suction Lift: Dry: 2.0 meters. Wet (Primed): 8.0 meters.
Max Discharge Pressure: 0.7 MPa
Check Valve Configuration: Ball Valves.
Pump Wetted Material Options: PP, PPG, CFPP
Diaphragm Options: PTFE-EPDM “W”, PTFE, CR, EPDM, NBR, TPEE, TPO.
Air Motor Material: Aluminium.
Description: ⅜” Plastic AODD Pumps available in Pure PP. Spring-Less Air Spool. Aluminium Air Motor. Multi Ports. Ball Check Valves. External Plastic Silencer.



TC-X101P☐ ⅜” PP Pump
Multiport Liquid Connections
Metallic Air Motor

101 Plastic Pump Specifications	
Pump Model / Material	**P☐ C☐ G☐**
Max. Flow Rate	22 l/min [5.8 Gallon/min]
Max. Solids Size	1.0 mm or less
Max. Discharge Pressure	0.7 MPa [100 psi]
Max. Suction Lift	Dry: 2.0 m Wet (Primed): 8.0 m
Supply Air Pressure Range	0.2 - 0.7 MPa [30 - 100 psi]
Max. Air Consumption	250 l/min (ANR) [8.83 SCFM]
Max. Discharge Volume Per Cycle	50 ml
Ambient Temperature Range	0 - 70°C [32 - 158°F]
Liquid Temperature Range	0 - 60°C [32 - 140°F]
Connections: Manifolds / Air	⅜” Rc Female Threaded Centre Ports (Multi-Ports on Pure PP Models) / ¼” Rc Ball valve

Note. *Factors affecting a pumps stated liquid flow rate, suction lift & solids handling capabilities include, but are not limited to; pump size, diaphragm, ball valve & ball seat, type & materials of construction, air inlet pressure & air flow capability, liquid viscosity, specific gravity, slurry content, ambient & liquid temperature, liquid inlet & liquid outlet width, piping type, piping length & overall piping configuration. A minimum supply air pressure of 30 PSI (0.2 MPa) is required to operate the pump.*

Pump Performance Curves

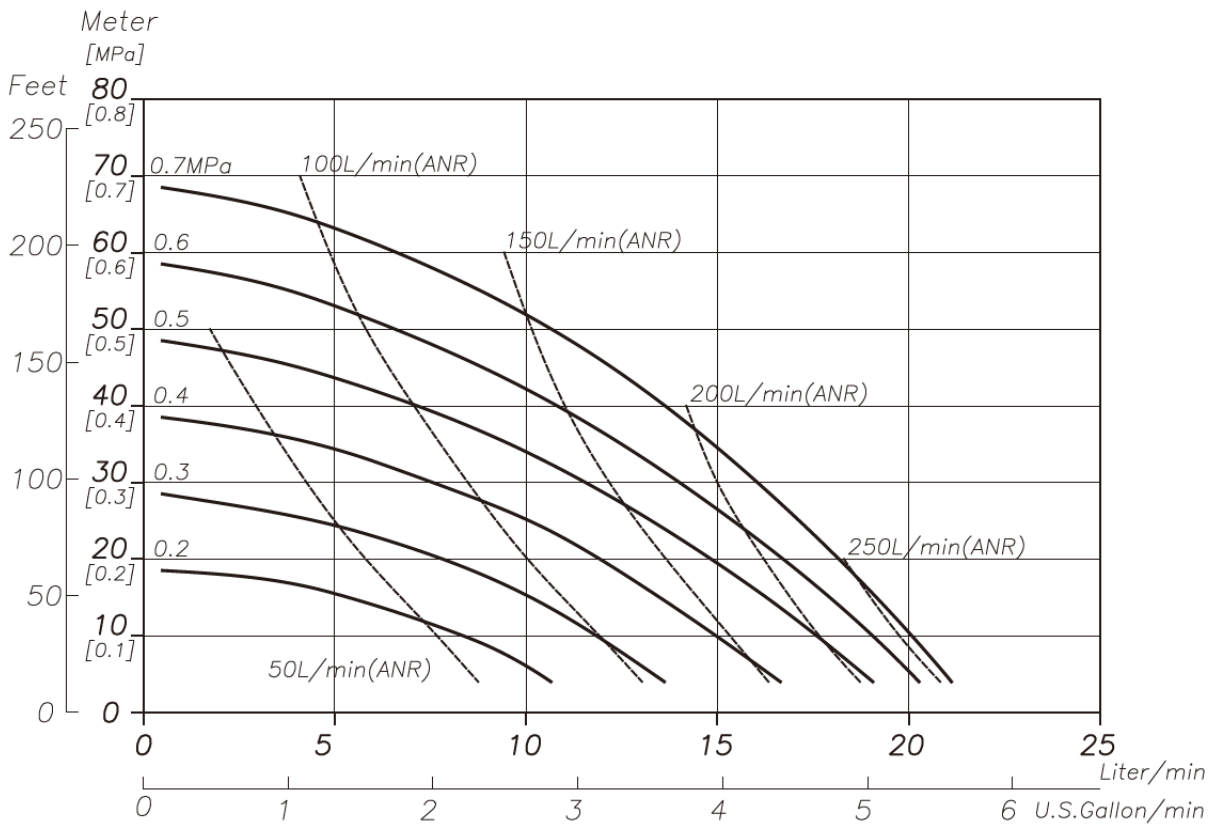



TC-X101G☐ ⅜” PPG Pump
Multiport Liquid Connections
Metallic Air Motor

For more information about TC-X Pumps please contact: sales@iwaki.de
WWW.IWAKI.DE

Air Operated Double Diaphragm Pumps

IWAKI AIR EUROPE

Wetted Materials Of Construction

MODEL	101PC (101PCN)	101PN (101PNN)	101PE (101PEN)	101PT (101PTN)	101PH (101PHN)	101PS (101PSN)	101PW (101PWN)	101CT (101CTN)	101CW (101CWN)	101GC (101GCN)	101GN (101GNN)	101GE (101GEN)	101GT (101GTN)	101GH (101GHN)	101GS (101GSN)	101GW (101GWN)
Pump Wetted Parts	PP									PPG						
Diaphragm	CR	NBR	EPDM	PTFE	TPEE	TPO	PTFE-EPDM	PTFE	PTFE-EPDM	CR	NBR	EPDM	PTFE	TPEE	TPO	PTFE-EPDM
Valve Stopper	PP							CFPP		PPG						
Ball Valve	CR	NBR	EPDM	PTFE	NBR	EPDM	PTFE	PTFE	PTFE	CR	NBR	EPDM	PTFE	NBR	EPDM	PTFE
Valve Seat	PP							CFPP		CR	NBR	PPG				
Center Disk	PP							CFPP		PPG						
Weight	3.0 kg (6.6 lbs)							3.0 kg (6.6 lbs)		3.0 kg (6.6 lbs)						

Dimensional Drawings

101P□ 101C□

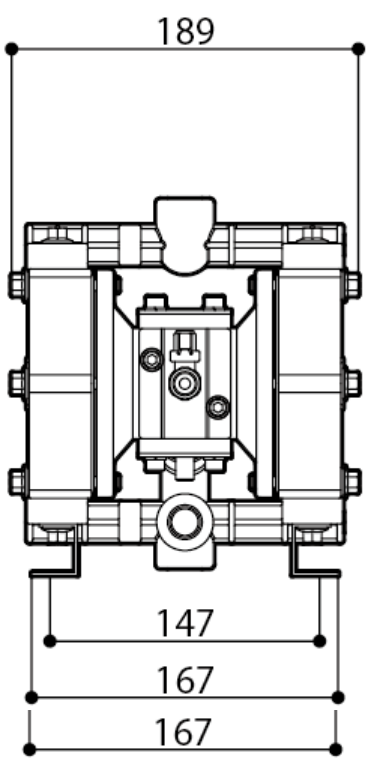

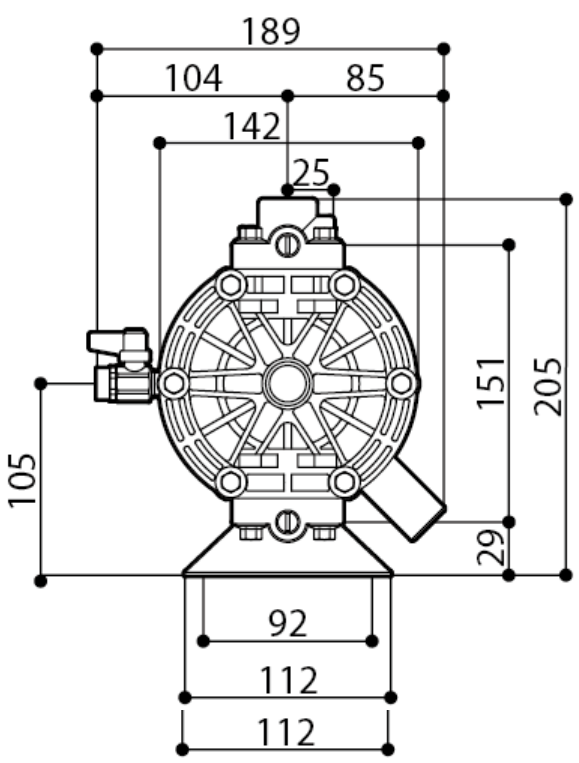

101G□

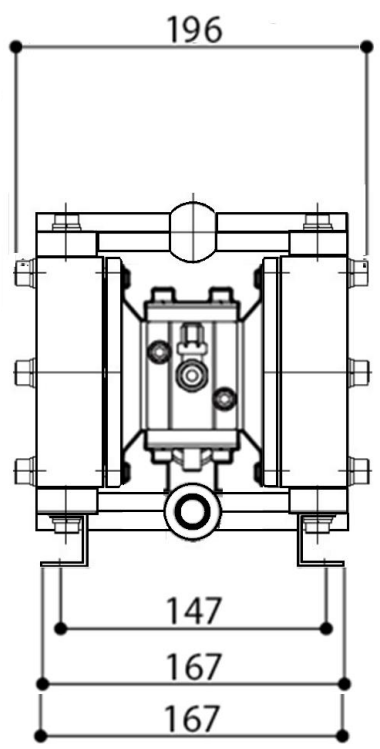

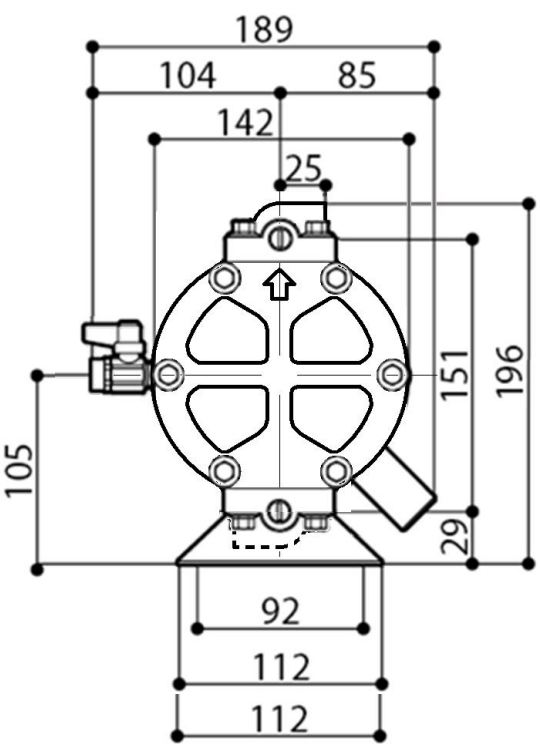

Nomenclature

Series: TC-X | 101 | P | T | N | - | X (Special Options)

- 101: Pump Connection Size 101 (⅜")
- P: Pump Body Material (Wetted) — P: PP; G: PPG; C: CFPP
- T: Diaphragm Material — W: PTFE-EPDM; T: PTFE; C: CR; E: EPDM; N: NBR; H: TPEE; S: TPO
- N: Connection Type — □: Rc; N: NPT



TC-X101C□ ⅜" CFPP Pump
Multiport Liquid Connections
Metallic Air Motor

AODD Pump Capabilities

Self Priming	Variable Discharge Pressures	Inherently Safe Design
Run Dry	Transfer Liquid Slurries	Portable & Easy to Use
Run up to Dead Head	Transfer Large Sized Solids	Transfer Viscous Fluids
Variable Flow Rates	Handle Abrasives	Frequent Start Stop Operation
Shear Sensitivity	Transfer Chemicals	Powered by Compressed Air

CE LoopedC

Ex II2G ExhIIBT5Gb「0°C<Ta<70°C」
II2D ExhIIIBT100°CDb「0°C<Ta<70°C」

For more information about TC-X Pumps please contact: sales@iwaki.de
WWW.IWAKI.DE

JQA-QMA14279 091