Air Operated Double Diaphragm Pumps

IWAKI AIR EUROPE

TC-X150.

½” Plastic Diaphragm Pump Data Sheet

Max. Flow Rate: 28 l/min
Liquid Connections: ½” Female Side-ports
Max. Slurry Size: 1.0 mm (Ball Valve Models)
Max. Suction Lift: Dry Flat Valve: 2.0m Ball Valve: 1.5m Wet (Primed): 8.0m
Max. Discharge Pressure: 0.7 MPa
Check Valve Configuration: Flat Valves & Ball Valve Models
Pump Wetted Material Options: GFRPP, POM
Diaphragm Options: PTFE-EPDM “W”, PTFE, CR, NBR, TPEE, TPO
Air Motor Material: Aluminium
Description: Original Model ½” AODD Pumps available in GFRPP & POM, Spring-Less Air Spool, Aluminium Air Motor, Ball & Flat Check Valves, Side Port Threaded Connections, Wide Range of Diaphragm Options, External Exhaust Silencer



TC-X150G□
½” GFRPP Pump
Metallic Air Motor

150 Plastic Pump Specifications		
Pump Model / Material	**G□ D□**	
Max. Flow Rate	28 l/min [7.39 GPM]	
Max. Solids Size	1.0 mm *(Ball Valve Version)*	0 mm *(Flat Valve Version)*
Max. Discharge Pressure	0.7 Mpa [100 psi]	
Max. Suction Lift	Flat Valve Dry: 2.0 m Ball Valve Dry: 1.5 m Wet (Primed): 8.0 m	
Supply Air Pressure Range	0.2 - 0.7 MPa [30 - 100 psi]	
Max. Air Consumption	300 l/min (ANR) [10.6 SCFM]	
Max. Discharge Vol. Per Cycle	50 ml	
Ambient Temp. Range	0 - 70°C [32 - 158°F]	
Liquid Temp. Range	0 - 60°C [32 - 140°F]	
Connections: Manifolds / Air	½” Rc Female Threaded Side-Ports / ¼” Rc Ball valve	

Note. *Factors affecting a pumps stated liquid flow rate, suction lift & solids handling capabilities include, but are not limited to; pump size, diaphragm, ball valve & ball seat, type & materials of construction, air inlet pressure & air flow capability, liquid viscosity, specific gravity, slurry content, ambient & liquid temperature, liquid inlet & liquid outlet width, piping type, piping length & overall piping configuration. A minimum supply air pressure of 30 PSI (0.2 MPa) is required to operate the pump.*

Pump Performance Curves

150G□ ▪150DT

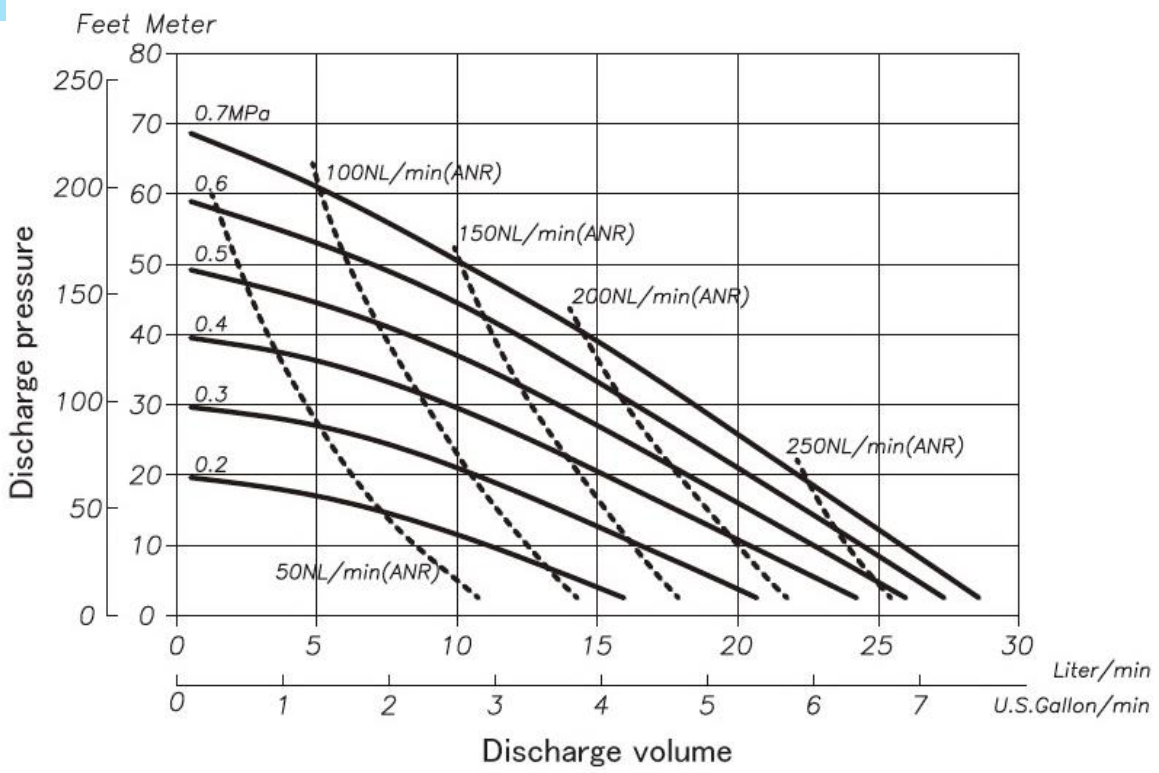

For more information about TC-X Pumps please contact: sales@iwaki.de
WWW.IWAKI.DE

Air Operated Double Diaphragm Pumps

IWAKI AIR EUROPE

Wetted Materials Of Construction

MODEL	150GC	150GN	150GE	150GT	150GH	150GS	150GW	150DT	150DW
Pump Wetted Parts	PPG							POM	
Diaphragm	CR	NBR	EPDM	PTFE	TPEE	TPO	PTFE-EPDM	PTFE	PTFE-EPDM
Valve Stopper	PPG							POM	
Ball Valve	CR	NBR	EPDM	PTFE	NBR	EPDM	PTFE	PTFE	PTFE
Valve Seat	PPG							POM	
Center Disk	PPG							POM	
Weight	3.5 kg (7.7 lbs)								

Dimensional Drawings

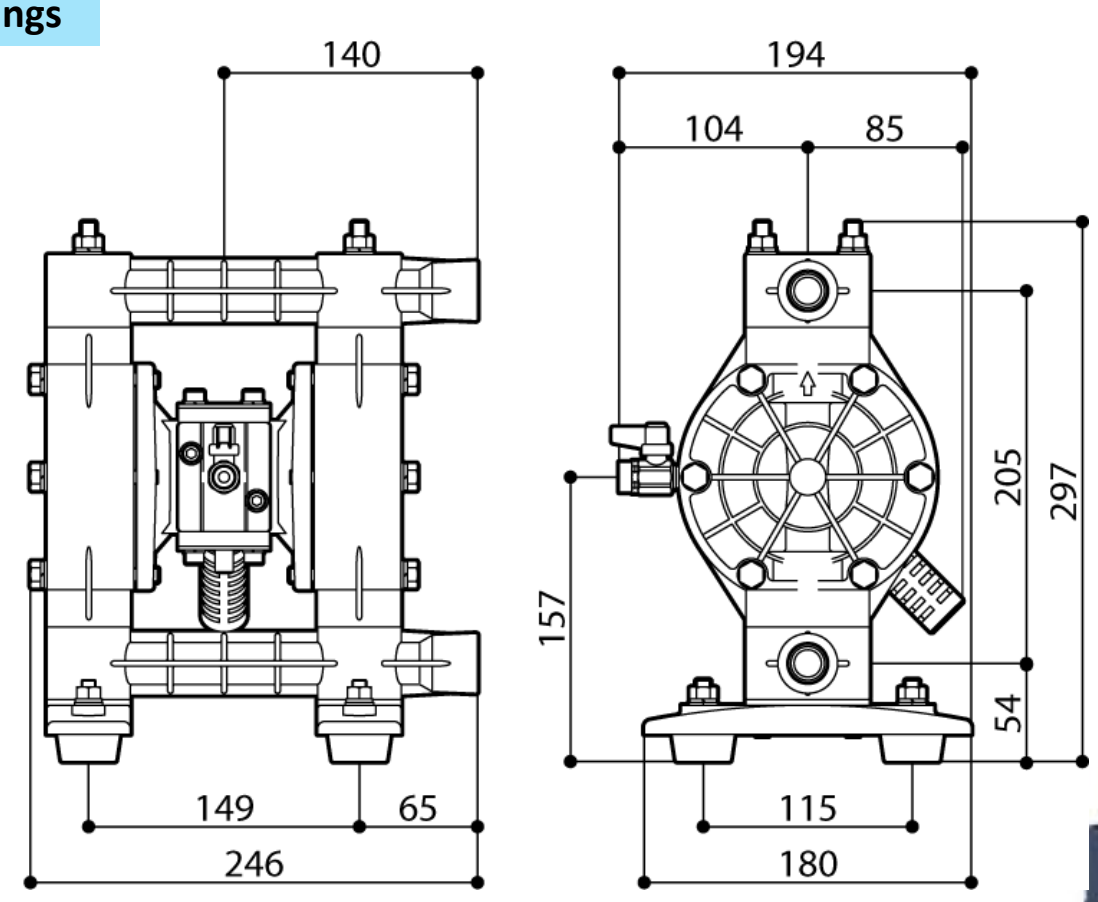

Nomenclature

Series TC-X | 150 | G | T | N | - | X — Special Options

- 150: Pump Connection Size 150 (½")
- G: Pump Body Material (Wetted) — G: GFRPP; D: Delrin/POM
- T: Diaphragm Material — W: PTFE-EPDM; T: PTFE; C: CR; N: NBR; H: TPEE; S: TPO
- N: Connection Type — ☐: Rc; N: NPT

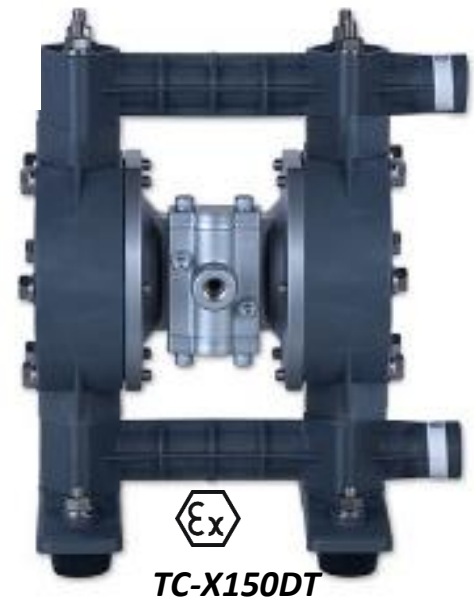

TC-X150DT

½" Delrin / POM Pump

AODD Pump Capabilities

Self Priming	Variable Discharge Pressures	Inherently Safe Design
Run Dry	Transfer Liquid Slurries	Portable & Easy to Use
Run up to Dead Head	Transfer Large Sized Solids	Transfer Viscous Fluids
Variable Flow Rates	Handle Abrasives	Frequent Start Stop Operation
Shear Sensitivity	Transfer Chemicals	Powered by Compressed Air

CE LoopedC

Ex II2G ExhIIBT5Gb「0°C<Ta<70°C」
II2D ExhIIIBT100°CDb「0°C<Ta<70°C」

For more information about TC-X Pumps please contact: sales@iwaki.de

WWW.IWAKI.DE

JQA-QMA14279

091