TC-X152ST-FDA / SW-FDA

½” Metallic Diaphragm Pump, FDA-compliant Data Sheet

Max. Flow Rate: 65 l/min
Liquid Connections: Ferrule 25A Tri-clamp
Max. Slurry Size: 2.0 mm (Ball Valve Models)
Max. Suction Lift: Dry: 1.5m Wet (Primed): 8.0 m
Max. Discharge Pressure: 0.7 MPa
Check Valve Configuration: Ball Valves
Pump Wetted Material Options: Stainless Steel – SCS14 electro polished
Diaphragm Options: PTFE-EPDM “W”, PTFE “T”
Air Motor Material: PPG or CFPP for ATEX



TC-X152S□-FDA
½” Stainless Steel Pump

152S□-FDA SCS14 Electro-Polished Pump Specifications	
Pump Model / Material	**ST-FDA, SW-FDA**
Max. Flow Rate	62 l/min [16.4 GPM] *(Flat Valve Version)*
Max. Solids Size	2.0 mm or less
Max. Discharge Pressure	0.7 MPa [100 PSI]
Max. Suction Lift	Dry: 1.5 m Wet (Primed): 8.0 m
Supply Air Pressure Range	0.2 - 0.7 MPa [30 - 100 PSI]
Max. Air Consumption	700 l/min (ANR) [31.8 SCFM]
Max. Discharge Volume Per Cycle	85 ml
Ambient Temperature Range	0 - 70°C [32 - 158°F]
Liquid Temperature Range	0 - 70°C [32 - 158°F]
Connections: Manifolds / Air	Ferrule 25A (Tri-clamp) side port / ¼” Rc Air Ball valve

Note. *Factors affecting a pumps stated liquid flow rate, suction lift & solids handling capabilities include, but are not limited to; pump size, diaphragm, ball valve & ball seat, type & materials of construction, air inlet pressure & air flow capability, liquid viscosity, specific gravity, slurry content, ambient & liquid temperature, liquid inlet & liquid outlet width, piping type, piping length & overall piping configuration. A minimum supply air pressure of 30 PSI (0.2 MPa) is required to operate the pump. For some plastic models, Ball check valves are available.*

Pump Performance Curves

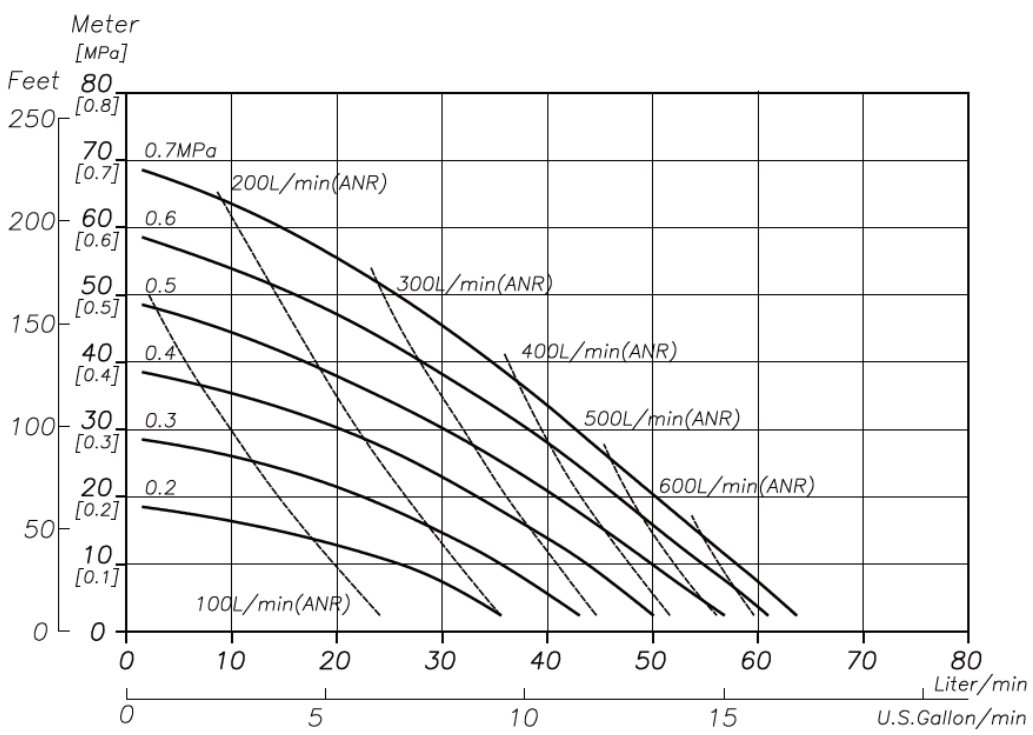

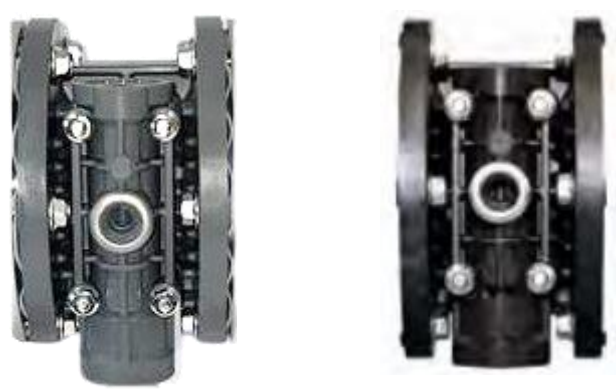

Standard Grey PPG motor
Optional
Black conductive CFPP motor
for ATEX

For more information about TC-X Pumps please contact: sales@iwaki.de
WWW.IWAKI.DE

Air Operated Double Diaphragm Pumps

IWAKI AIR EUROPE

Wetted Materials Of Construction

MODEL	152ST-FDA	152SW-FDA
Pump Wetted Parts	SCS14 Electro-polished	
Diaphragm	PTFE	PTFE-EPDM
Valve Stopper	SUS316 Electro-polished	
Ball Valve	PTFE	
Valve Seat	SUS316 Electro-polished	
Center Disk	SUS316 Electro-polished	
Weight	7.0 kg [15.4 lbs)]	



TC-X152SW-FDA:
W-Diaphragms
For easy cleaning
Long lifetime

Dimensional Drawings

15S☐-FDA

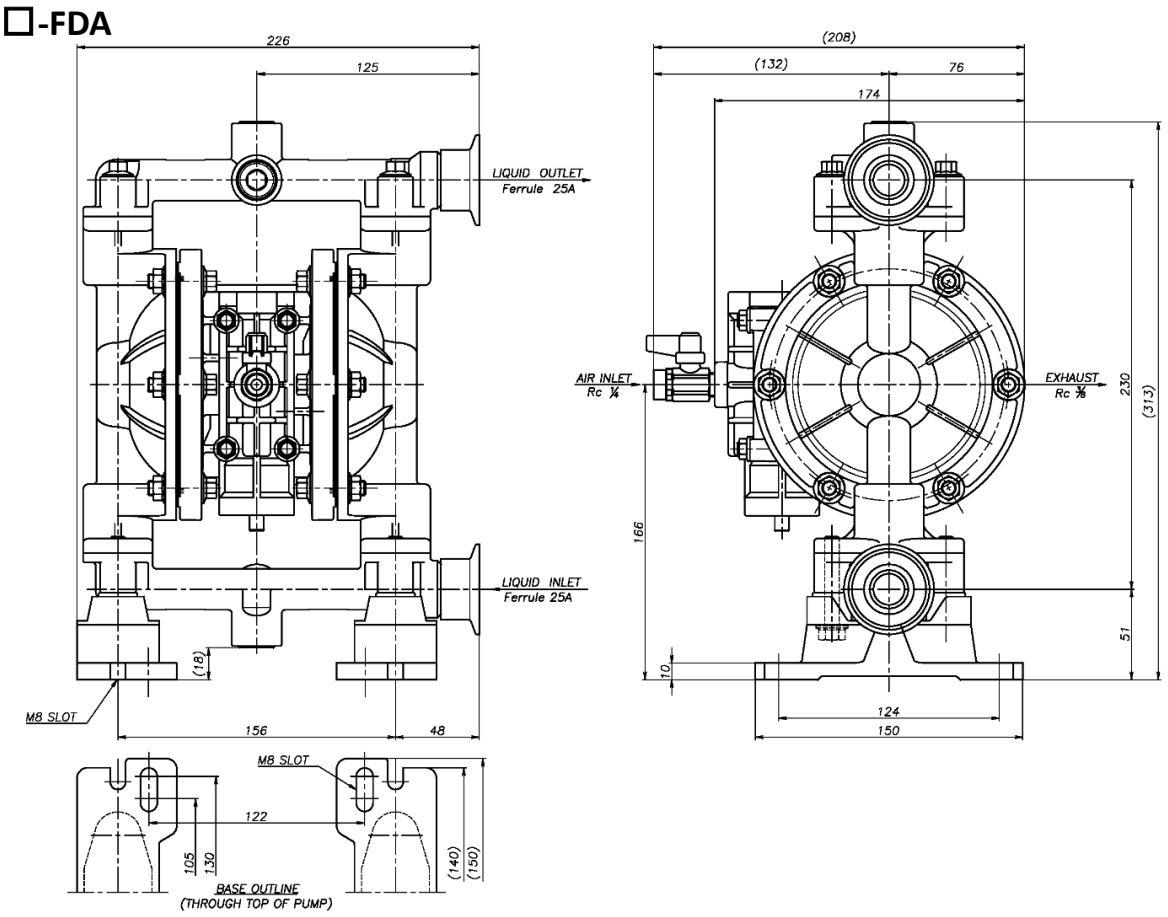



Ferrule Food connections
(Tri-Clamp)

Nomenclature

Series: TC-X | 152 | S | W - FDA

- 152 — Pump Connection Size
- S — Pump Body Material (Wetted): S: SCS14 (SUS316) Electro-polished
- W — Diaphragm Material: W: PTFE-EPDM; T: PTFE
- FDA — Connection Type: Ferrule 25A (Tri-Clamp); Wetted material: SCS14 Electro-polished; Wetted center disk: Capped type (Only for ST)

AODD Pump Capabilities

Self Priming	Variable Discharge Pressures	Inherently Safe Design
Run Dry	Transfer Liquid Slurries	Portable & Easy to Use
Run up to Dead Head	Transfer Large Sized Solids	Transfer Viscous Fluids
Variable Flow Rates	Handle Abrasives	Frequent Start Stop Operation
Shear Sensitivity	Transfer Chemicals	Powered by Compressed Air

CE LoopedC

II2G ExhIIBT5Gb「0°C<Ta<70°C」
II2D ExhIIIBT100°CDb「0°C<Ta<70°C」

JQA-QMA14279

091

For more information about TC-X Pumps please contact: sales@iwaki.de
WWW.IWAKI.DE