TC-X200 Metallic

¾” Metallic Diaphragm Pump Data Sheet

Max. Flow Rate: 210 l/min (Rubber)
Max. Discharge Pressure: 0.7 MPa
Max. Slurry Size: 6.5 mm
Max. Suction Lift: PTFE Dry: 1.5 m Rubber Dry: 4.5 m Wet (Primed): 8.0 m
Liquid Connection Size: ¾”
Liquid Connection Configuration: Female Threaded Centre Ports
Pump Wetted Material Options: Aluminium, Stainless Steel
Air Motor Material: PPG (Optional CFPP(-PC) & Aluminium(-A))
Diaphragm Options: PTFE-EPDM “W”, PTFE, CR, NBR, TPEE, TPO, EPDM, FKM
Check Valve Configuration: Ball Type Check Valves
Air Motor Model: Looped C-Spring Air Spool
Exhaust Configuration: External Plastic Exhaust Silencer (x1)
Base & Footprint: Heavy Duty Steel Legs



TC-X200S□
¾” SUS Pump 210 l/min

200 Metallic Pump Specifications		
Pump Model	**A□ S□**	**AT/AW ST/SW**
Max. Flow Rate	210 l/min [55.5 GPM]	190 l/min [50.2 GPM]
Max. Solids Size	6.5 mm	
Max. Discharge Pressure	0.7 MPa [100 psi]	
Supply Air Pressure Range	0.2 - 0.7 MPa [30 - 100 psi]	
Max. Suction Lift	PTFE Dry: 1.5 m Rubber Dry: 4.5 m Wet (Primed): 8.0 m	
Max. Air Consumption	1600 l/min (ANR) [56.5 SCFM]	
Max. Discharge Vol. Per Cycle	800 ml	650 ml
Ambient Temp. Range	0 - 70°C [32 – 158°F]	
Liquid Temp. Range	0-70°C [32-158°F] (-A Models; NBR/CR 0-70°C TPEE/EPDM 0-80°C FKM/TPO/PTFE 0-100°C)*	
Connections: Manifolds / Air	¾” Rc Female Threaded Centre Ports / 3/8” Rc Ball valve	

*Operating in the condition a fluid temperature is at 70°C or above might cause an early degradation of performance and required to change the material of air motor seal parts. Please contact your nearest distributor for details.

Note: *Factors affecting a pumps stated liquid flow rate, suction lift & solids handling capabilities include, but are not limited to; pump size, diaphragm, ball valve & ball seat, type & materials of construction, air inlet pressure & air flow capability, liquid viscosity, specific gravity, slurry content, ambient & liquid temperature, liquid inlet & liquid outlet width, piping type, piping length & overall piping configuration. A minimum supply air pressure of 30 PSI (0.2 MPa) is required to operate the pump.*

Pump Performance Curves

Rubber Diaphragm Curves

200A□ 200S□

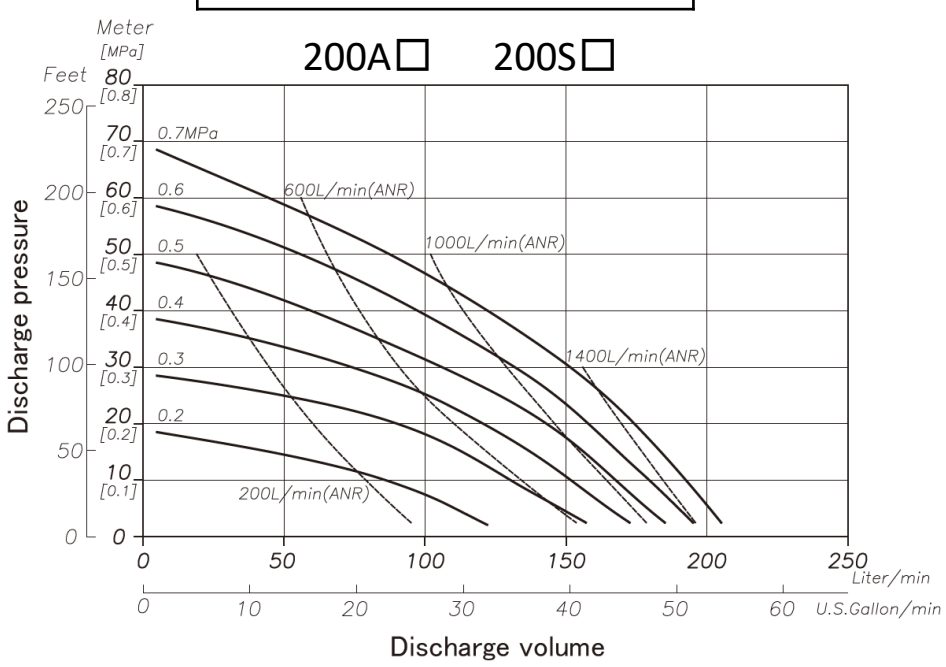

PTFE Diaphragm Curves

200AT/AW 200ST/SW

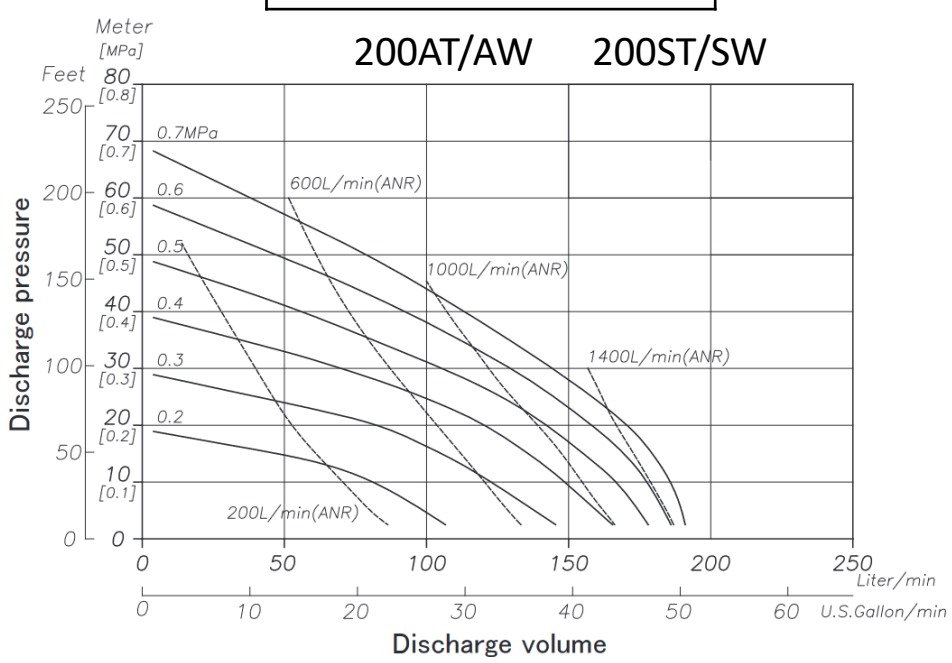

For more information about TC-X Pumps please contact: sales@iwaki.de

Air Operated Double Diaphragm Pumps

IWAKI AIR EUROPE

Wetted Materials Of Construction

MODEL	200AC 200AC-A	200AN 200AN-A	200AE 200AE-A	200AV 200AV-A	200AT 200AT-A	200AH 200AH-A	200AS 200AS-A	200AW 200AW-A	200SC 200SC-A	200SN 200SN-A	200SE 200SE-A	200SV 200SV-A	200ST 200ST-A	200SH 200SH-A	200SS 200SS-A	200AW 200AW-A
Pump Wetted Parts	ADC12 * AC4C								SCS14							
Diaphragm	CR	NBR	EPDM	FKM	PTFE	TPEE	TPO	PTFE-EPDM	CR	NBR	EPDM	FKM	PTFE	TPEE	TPO	PTFE-EPDM
Valve Stopper	SCS14								SCS14							
Ball Valve	CR	NBR	EPDM	FKM	PTFE	NBR	EPDM	PTFE	CR	NBR	EPDM	FKM	PTFE	NBR	EPDM	PTFE
Valve Seat	CR	NBR	EPDM	FKM	PTFE	NBR	EPDM	PTFE	CR	NBR	EPDM	FKM	PTFE	NBR	EPDM	PTFE
Center Disk	SUS316				A5056	SUS316			SUS316							
Weight	200A. 10.0 kg (22.1 lbs)								200S. 18.5 kg (40.8 lbs)							
	200A.-A 11.5 kg (25.4 lbs)								200S.-A 20.0 kg (44.1 lbs)							

Dimensional Drawings

200A□・S□

Plastic Air Motor Models

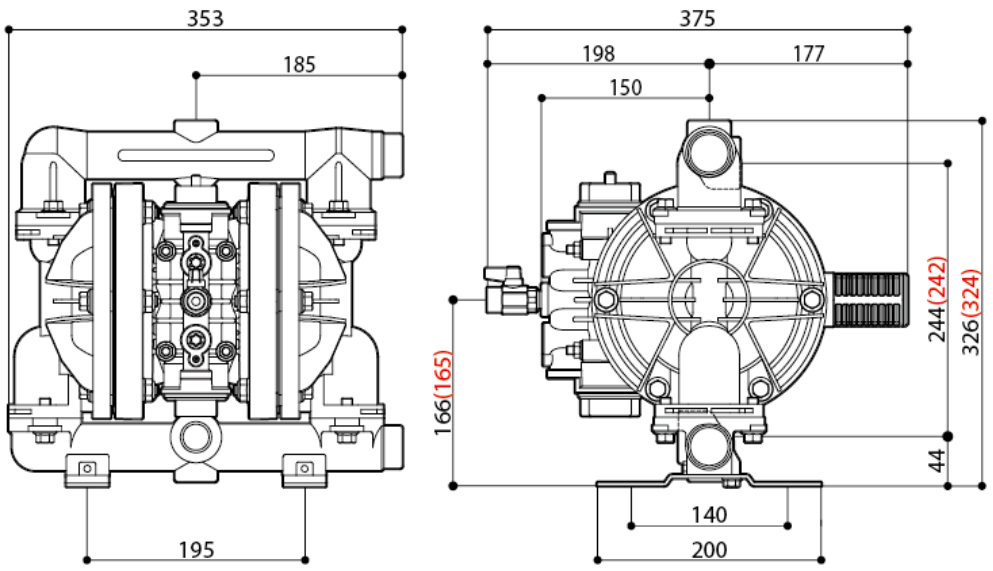

200A□-A・S□-A

Metallic Air Motor Models

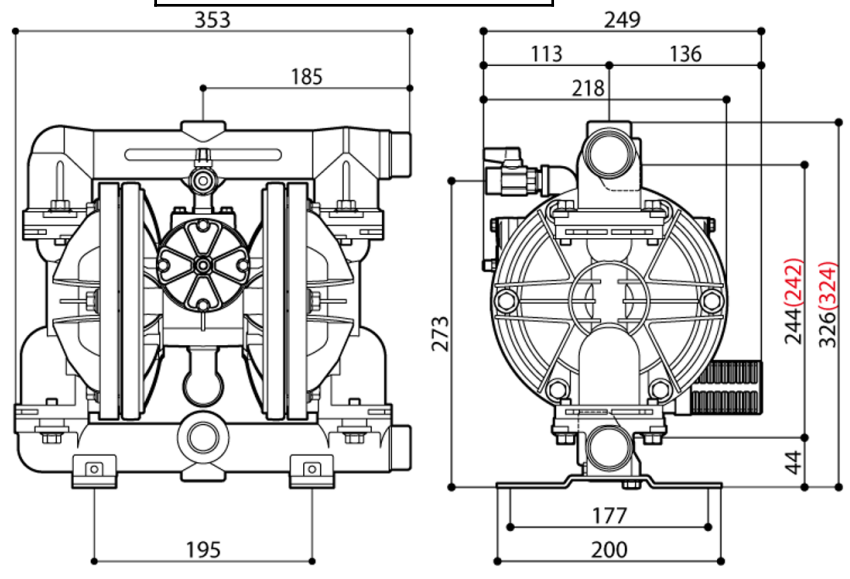

Nomenclature

Series TC-X | 200 | A | W | N | - | A | X — Special Options

- 200 — Pump Connection Size: 200 (¾")
- A — Pump Body Material (Wetted): A: Al; S: SUS
- W — Diaphragm Material: W: PTFE-EPDM Bonded; T: PTFE; T-SB: PTFE/TPO; C: CR; N: NBR; H: TPEE; S: TPO; E: EPDM; V: FKM
- N — Connection Type: □: Rc; N: NPT
- A — □: PPG Air Motor; PC: Conductive PPG Air Motor; A: Aluminium Air Motor

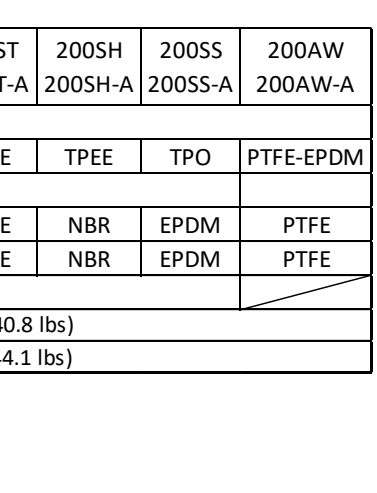

TC-X200A□-A

¾" Aluminium Pump
Aluminium Motor

AODD Pump Capabilities

Self Priming	Variable Discharge Pressures	Inherently Safe Design
Run Dry	Transfer Liquid Slurries	Portable & Easy to Use
Run up to Dead Head	Transfer Large Sized Solids	Transfer Viscous Fluids
Variable Flow Rates	Handle Abrasives	Frequent Start Stop Operation
Shear Sensitivity	Transfer Chemicals	Powered by Compressed Air

CE LoopedC

Ex II2G ExhIIBT5Gb「0°C<Ta<70°C」
II2D ExhIIIBT100°CDb「0°C<Ta<70°C」

For more information about TC-X Pumps please contact: sales@iwaki.de

JQA-QMA14279

091