TC-X200 Plastic

¾” Plastic Diaphragm Pump Data Sheet

Max. Flow Rate: 130 l/min (Rubber)
Liquid Connections: ¾” Female / Flange Side-ports
Max. Slurry Size: 2.0 mm
Max. Suction Lift: PTFE Dry: 1.5 m Rubber Dry: 3.0 m Wet (Primed): 8.0 m
Max. Discharge Pressure: 0.7 MPa
Check Valve Configuration: Ball Valves
Pump Wetted Material Options: PPG, CF-PVDF
Diaphragm Options: PTFE-EPDM “W”, PTFE, CR, NBR, TPEE, TPO, EPDM, FKM
Air Motor Material: PPG (Optional CFPP for PVDF pump ATEX conform)

Description: ¾” Plastic AODD Pumps available in PPG, Looped C-Spring Air Spool, PPG / CFPP Air Motor, Threaded / Flanged Side Port Connections, Large Range of Diaphragm Options, Ball Check Valves, External Exhaust Silencer



TC-X200G□J
¾” PPG Pump

200 Plastic Pump Specifications		
Pump Model / Material	**G□(J) V□(J)**	**GT(J)/GW(J) VT(J)/VW(J)**
Max. Flow Rate	130 l/min [34.3 GPM]	110 l/min [29.1 GPM]
Max. Solids Size	2.0 mm	
Max. Discharge Pressure	0.7 MPa [100 psi]	
Supply Air Pressure Range	0.2 - 0.7 MPa [30 - 100 psi]	
Max. Suction Lift	PTFE Dry: 1.5 m Rubber Dry: 3.0 m Wet (Primed): 8.0 m	
Max. Air Consumption	1300 l/min (ANR) [45.9 SCFM]	1200 l/min (ANR) [42.3 SCFM]
Max. Discharge Volume Per Cycle	350 ml	240 ml
Ambient Temperature Range	0 - 70°C [32 - 158°F]	
Liquid Temperature Range	0 - 60°C [32 - 140°F]	
Connections: Manifolds / Air	¾” Rc Female Threaded or DN20(J) Flanged Side-ports / [3/8” Rc], ¼” Rc Air Ball valve	

Note: *Factors affecting a pumps stated liquid flow rate, suction lift & solids handling capabilities include, but are not limited to; pump size, diaphragm, ball valve & ball seat, type & materials of construction, air inlet pressure & air flow capability, liquid viscosity, specific gravity, slurry content, ambient & liquid temperature, liquid inlet & liquid outlet width, piping type, piping length & overall piping configuration. A minimum supply air pressure of 30 PSI (0.2 MPa) is required to operate the pump.*

Pump Performance Curves

Rubber Diaphragm Curves

200G□(J) V□(J)

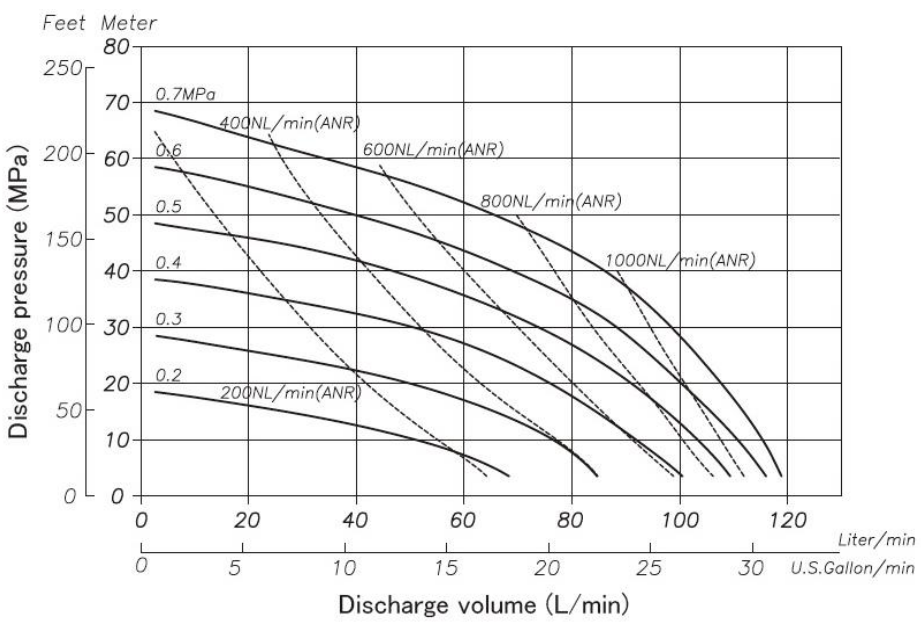

PTFE Diaphragm Curves

200GT(J)/GW(J) VT(J)/VW(J)

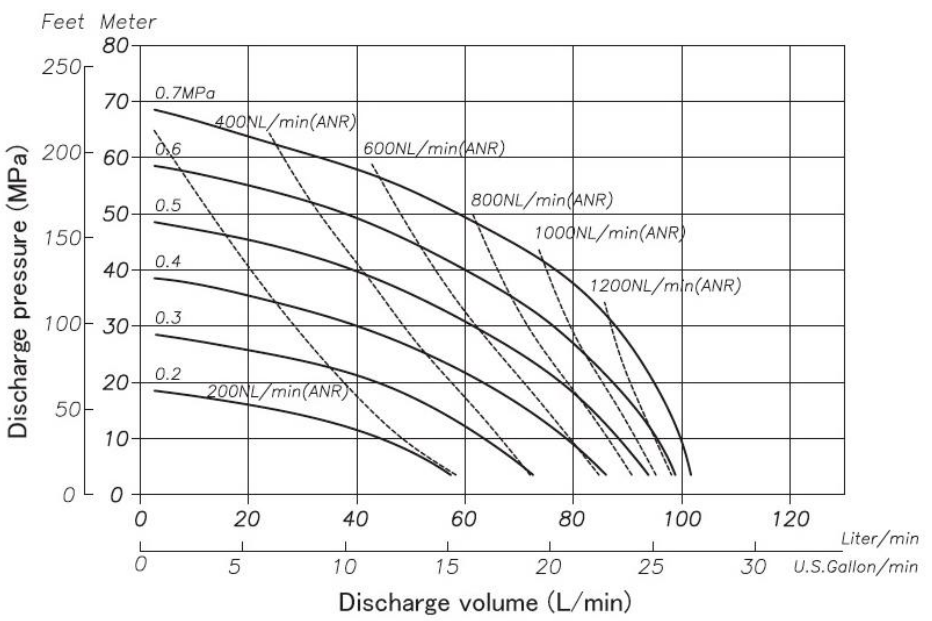

For more information about TC-X Pumps please contact: sales@iwaki.de
WWW.IWAKI.DE

Air Operated Double Diaphragm Pumps

IWAKI AIR EUROPE

Wetted Materials Of Construction

MODEL	200GC(J)	200GN(J)	200GE(J)	200GV(J)	200GT(J)	200GH(J)	200GS(J)	200GW(J)	200VE(J)	200VV(J)	200VT(J)	200VH(J)	200VS(J)	200VW(J)
Pump Wetted Parts	PPG								CFPVDF					
Diaphragm	CR	NBR	EPDM	FKM	PTFE	TPEE	TPO	PTFE-EPDM	EPDM	FKM	PTFE	TPEE	TPO	PTFE-EPDM
Valve Stopper	PPG								CFPVDF					
Ball Valve	CR	NBR	EPDM	FKM	PTFE	NBR	EPDM	PTFE	EPDM	FKM	PTFE	NBR	EPDM	PTFE
Valve Seat	PPG								CFPVDF					
Center Disk	PPG								CFPVDF					
Weight	7.0 kg (15.5 lbs)								9.0 kg (19.8 lbs)					

Dimensional Drawings

200G☐J V☐J Flange

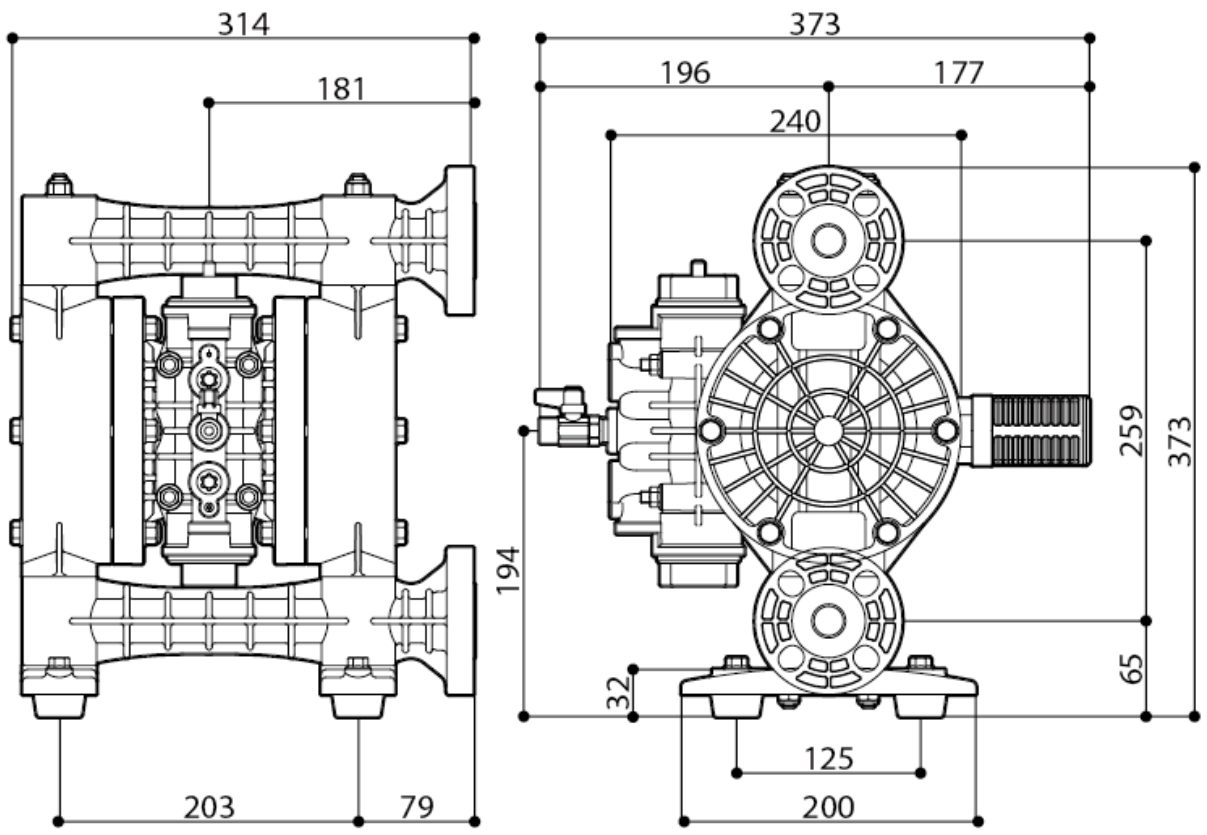

200G☐ V☐ Thread

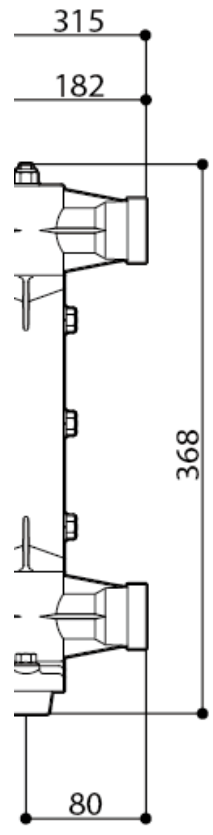

Nomenclature

Series TC-X | 200 | G | W | J | - | X

- 200: Pump Connection Size 200 (¾")
- G: Pump Body Material (Wetted) G: PPG V:CFPVDF
- W: Diaphragm Material W: PTFE-EPDM T : PTFE C : CR N:NBR H: TPEE S: TPO E: EPDM V: FKM
- J: Connection Type ☐: Rc N: NPT J: JIS/DIN Flange A: ANSI Flange
- X: Special Options ☐: PPG Air Motor PC: Conductive PP Motor for ATEX PVDF Pump

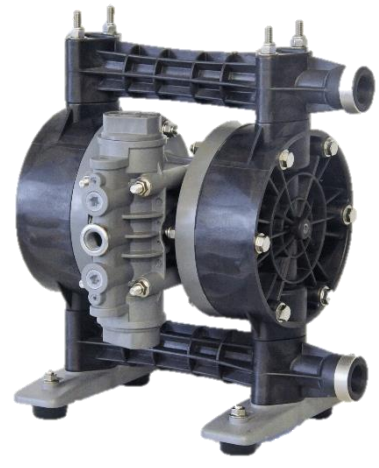

TC-X200V☐

¾" CF PVDF Pump

AODD Pump Capabilities

Self Priming	Variable Discharge Pressures	Inherently Safe Design
Run Dry	Transfer Liquid Slurries	Portable & Easy to Use
Run up to Dead Head	Transfer Large Sized Solids	Transfer Viscous Fluids
Variable Flow Rates	Handle Abrasives	Frequent Start Stop Operation
Shear Sensitivity	Transfer Chemicals	Powered by Compressed Air

CE Looped C

Ex II2G ExhIIBT5Gb「0°C<Ta<70°C」
II2D ExhIIIBT100°CDb「0°C<Ta<70°C」

For more information about TC-X Pumps please contact: sales@iwaki.de

WWW.IWAKI.DE

JQA-QMA14279

091