Air Operated Double Diaphragm Pumps

IWAKI AIR EUROPE

TC-X250 Metallic

1” Metallic Diaphragm Pump Data Sheet

LoopedC

AirEcoRing

Max. Flow Rate: 220 l/min (Rubber)
Max. Discharge Pressure: 0.7 MPa
Max. Slurry Size: 6.5 mm
Max. Suction Lift: PTFE Dry: 1.5 m Rubber Dry: 4.5 m Wet (Primed): 8.0 m
Liquid Connection Size: 1”
Liquid Connection Configuration: Female Threaded Multi-ports
Pump Wetted Material Options: Aluminium, Stainless Steel, Ferro-Cast Iron
Air Motor Material: PPG (Optional CFPP(-PC) & Aluminium(-A))
Diaphragm Options: PTFE, CR, NBR, TPEE, TPO, EPDM, FKM
Check Valve Configuration: High Flow Ball Type Check Valves
Air Motor Model: Looped C-Spring Air Spool
Exhaust Configuration: External Plastic Exhaust Silencer (x1)
Base & Footprint: Heavy Duty Steel Legs & Fully Adjustable Footprint



TC-X250S□
1” SUS Pump
220 l/min Max.

250 Metallic Pump Specifications		
Pump Model	**A□ S□ F□**	**AT/AW ST/SW FT/FW**
Max. Flow Rate	220 l/min [58.1 GPM]	190 l/min [50.2 GPM]
Max. Solids Size	6.5 mm	
Max. Discharge Pressure	0.7 MPa [100 psi]	
Supply Air Pressure Range	0.2 - 0.7 MPa [30 - 100 psi]	
Max. Suction Lift	PTFE Dry: 1.5 m Rubber Dry: 4.5 m Wet (Primed): 8.0 m	
Max. Air Consumption	1800 l/min (ANR) [63.5 SCFM]	1600 l/min (ANR) [56.5 SCFM]
Max. Discharge Vol. Per Cycle	800 ml	650 ml
Ambient Temp. Range	0 - 70°C [32 - 158°F]	
Liquid Temp. Range	0-70°C [32-158°F] (-A Models; NBR/CR 0-70°C TPEE/EPDM 0-80°C FKM/TPO/PTFE 0-100°C)*	
Connections: Manifolds / Air	1” Rc Female Threaded Multi Ports /⅜” Rc Air Ball valve	

*Operating in the condition a fluid temperature is at 70°C or above might cause an early degradation of performance and required to change the material of air motor seal parts. Please contact your nearest distributor for details.

Note: *Factors affecting a pumps stated liquid flow rate, suction lift & solids handling capabilities include, but are not limited to; pump size, diaphragm, ball valve & ball seat, type & materials of construction, air inlet pressure & air flow capability, liquid viscosity, specific gravity, slurry content, ambient & liquid temperature, liquid inlet & liquid outlet width, piping type, piping length & overall piping configuration. A minimum supply air pressure of 30 PSI (0.2 MPa) is required to operate the pump.*

Pump Performance Curves

Rubber Diaphragm Curves

250A□ 250S□ 250F□

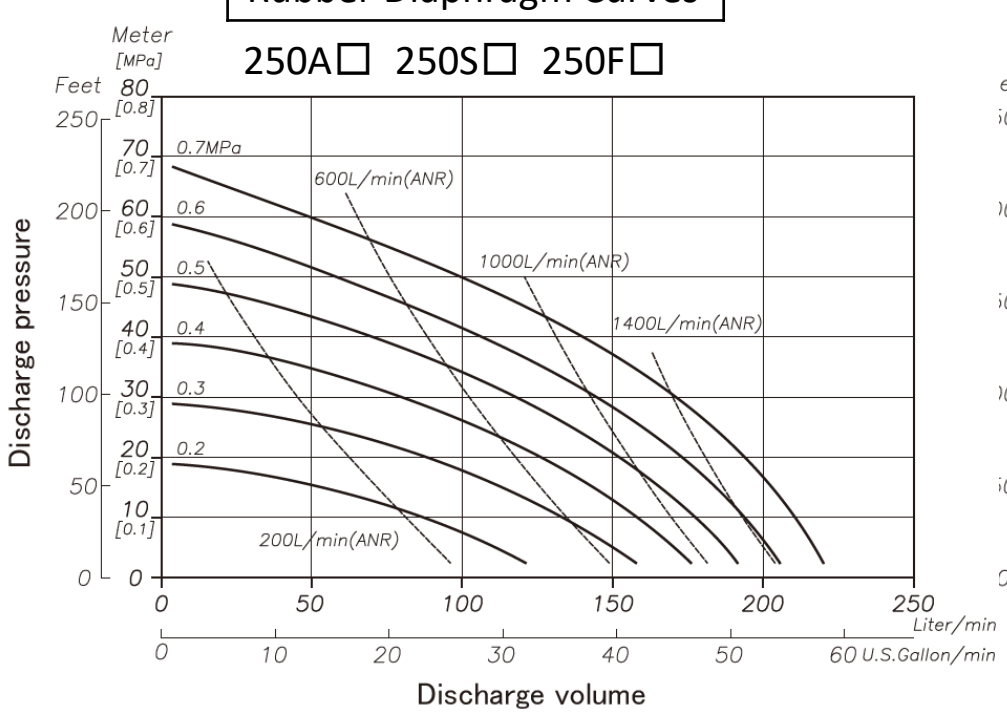

PTFE Diaphragm Curves

250AT/AW 250ST/SW 250FT/FW

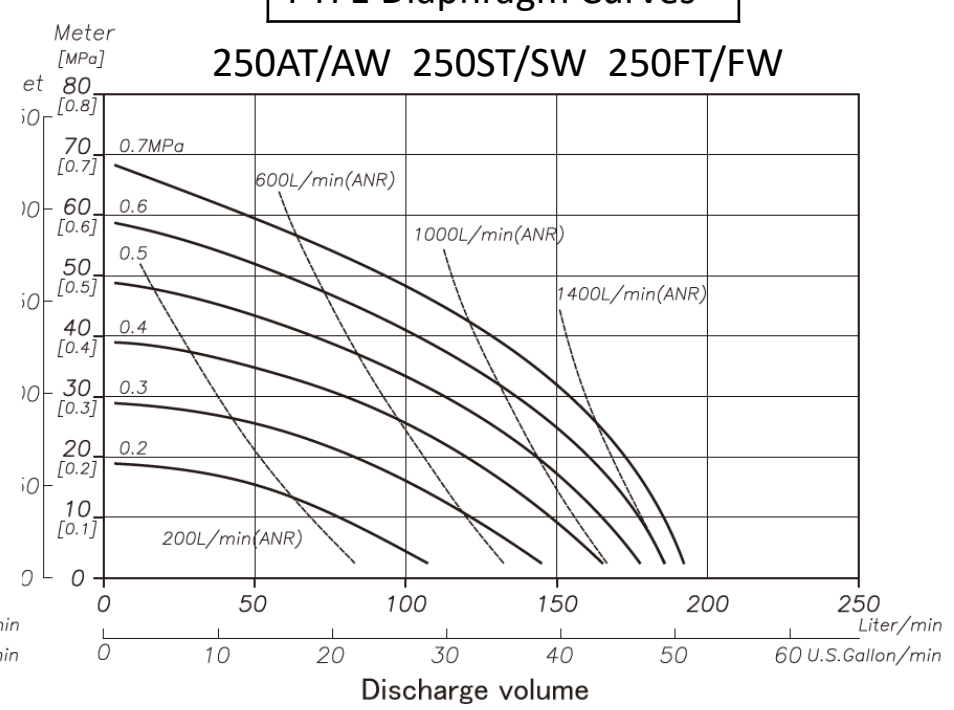

For more information about TC-X Pumps please contact: sales@iwaki.de
WWW.IWAKI.DE

Air Operated Double Diaphragm Pumps

IWAKI AIR EUROPE

Wetted Materials Of Construction

MODEL	250AC 250AC-A	250AN 250AN-A	250AE 250AE-A	250AV 250AV-A	250AT 250AT-A	250AH 250AH-A	250AS 250AS-A	250AW 250AW-A	250SC 250SC-A	250SN 250SN-A	250SE 250SE-A	250SV 250SV-A	250ST 250ST-A	250SH 250SH-A	250SS 250SS-A	250SW 250SW-A
Pump Wetted Parts	ADC12 * AC4C								SCS14							
Diaphragm	CR	NBR	EPDM	FKM	PTFE	TPEE	TPO	PTFE-EPDM	CR	NBR	EPDM	FKM	PTFE	TPEE	TPO	PTFE-EPDM
Valve Stopper	SCS14								SCS14							
Ball Valve	CR	NBR	EPDM	FKM	PTFE	NBR	EPDM	PTFE	CR	NBR	EPDM	FKM	PTFE	NBR	EPDM	PTFE
Valve Seat	CR	NBR	EPDM	FKM	PTFE	NBR	EPDM	PTFE	CR	NBR	EPDM	FKM	PTFE	NBR	EPDM	PTFE
Center Disk	SUS316				A5056	SUS316			SUS316							
Weight	250A. 10.5 kg (23.2 lbs)								250S. 19.0 kg (41.9 lbs)							
	250A.-A 12.0 kg (26.5 lbs)								250S.-A 20.5 kg (45.2 lbs)							

MODEL	250FC 250FC-A	250FN 250FN-A	250FE 250FE-A	250FV 250FV-A	250FT 250FT-A	250FH 250FH-A	250FF 250FF-A	250FW 250FW-A
Pump Wetted Parts	S45C							
Diaphragm	CR	NBR	EPDM	FKM	PTFE	TPEE	TPO	PTFE-EPDM
Valve Stopper	SCS14							
Ball Valve	CR	NBR	EPDM	FKM	PTFE	NBR	EPDM	PTFE
Valve Seat	CR	NBR	EPDM	FKM	PTFE	NBR	EPDM	PTFE
Center Disk	SUS316							
Weight	250F. 19.5 kg (43.0 lbs)							
	250F.-A 21.0 kg (46.3 lbs)							

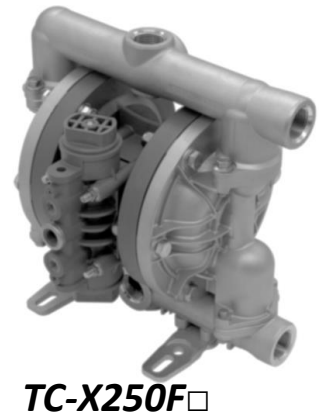

TC-X250F□

1" Cast-Iron AODD Pump

Dimensional Drawings

250A□・S□・F□

Plastic Air Motor Models

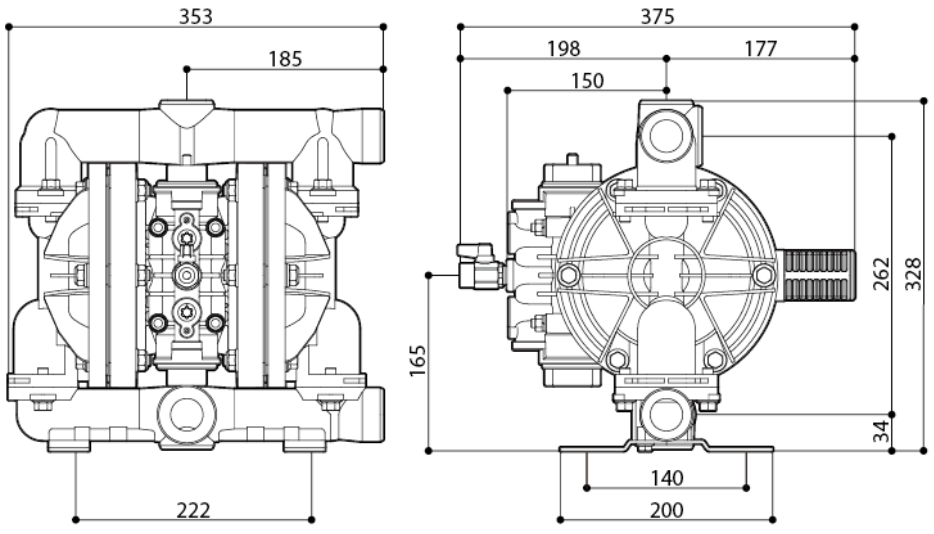

250A□-A・S□-A・F□-A

Metallic Air Motor Models

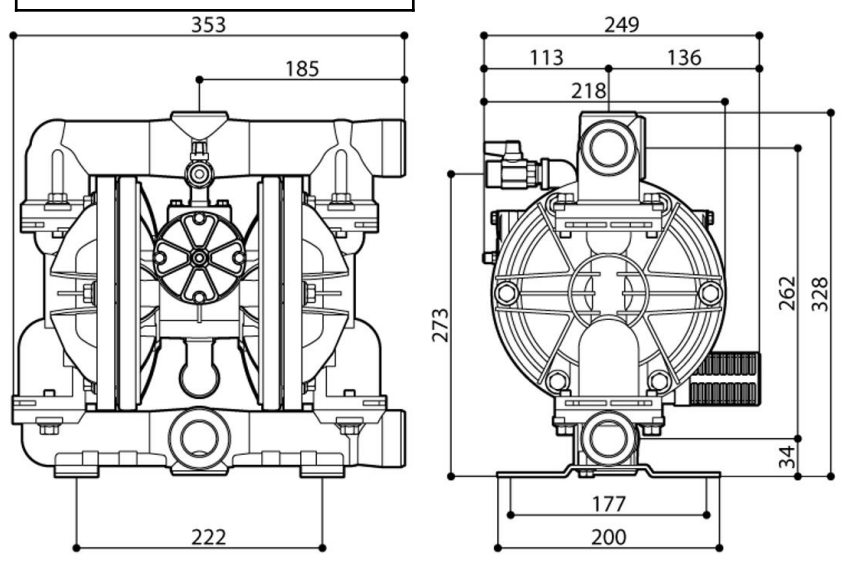

Nomenclature

Series TC-X | 250 | A | W | | - | A | X — Special Options

- 250: Pump Connection Size 250 (1")
- A: Pump Body Material (Wetted)
  - A: Al
  - S: SUS
  - F: Cast Iron
- W: Diaphragm Material
  - W: PTFE-EPDM
  - T : PTFE
  - C : CR
  - N : NBR
  - H : TPEE
  - S : TPO
  - E : EPDM
  - V : FKM
- Connection Type
  - □: Rc
  - N: NPT
- A: □: PPG Air Motor; PC: Conductive PPG Air Motor; A: Alminium Air Motor
- X: Special Options



TC-X250S.-A

1" SUS AODD Pump
Alu motor

AODD Pump Capabilities

Self Priming	Variable Discharge Pressures	Inherently Safe Design
Run Dry	Transfer Liquid Slurries	Portable & Easy to Use
Run up to Dead Head	Transfer Large Sized Solids	Transfer Viscous Fluids
Variable Flow Rates	Handle Abrasives	Frequent Start Stop Operation
Shear Sensitivity	Transfer Chemicals	Powered by Compressed Air

CE LoopedC

Ex II2G ExhIIBT5Gb「0°C<Ta<70°C」
II2D ExhIIIBT100°CDb「0°C<Ta<70°C」

For more information about TC-X Pumps please contact: sales@iwaki.de
WWW.IWAKI.DE

JQA-QMA14279

091