TC-X250 Plastic

1” Plastic Diaphragm Pump Data Sheet

Max. Flow Rate: 180 l/min
Max. Discharge Pressure: 0.7 MPa
Max. Slurry Size: 3.0 mm
Max. Suction Lift: PTFE Dry: 2.5 m Rubber Dry: 5.5 m Wet (Primed): 8.0 m
Liquid Connection Size: 1”
Liquid Connection Configuration: Female Threaded / Flange Side Ports
Pump Wetted Material Options: PPG, CFPVDF, CFPP
Air Motor Material: PPG, CFPVDF, CFPP
Diaphragm Options: PTFE-EPDM “W”,PTFE, CR, NBR, TPEE, TPO, EPDM, FKM
Check Valve Configuration: Ball Type Check Valves
Air Motor Model: Looped C-Spring Air Spool
Exhaust Configuration: External Plastic Exhaust Silencer (x1)
Base & Footprint: Heavy Duty Polypropylene “Multi-footprint” Legs



TC-X250G□J
1” Flanged PPG Pump

250 Plastic Pump Specifications		
Pump Model	**G□(J) V□(J) C□(J)**	**GT(J)/GW(J) VT(J)/VW(J) CT(J)/CW(J)**
Max. Flow Rate	180 l/min [47.6 GPM]	
Max. Solids Size	3.0 mm	
Max. Discharge Pressure	0.7 MPa [100 psi]	
Supply Air Pressure Range	0.2 - 0.7 MPa [30 - 100 psi]	
Max. Suction Lift	PTFE Dry: 2.5 m Rubber Dry: 5.5 m Wet (Primed): 8.0 m	
Max. Air Consumption	1500 l/min (ANR) [53.0 SCFM]	
Max. Discharge Vol. Per Cycle	600 ml	500 ml
Ambient Temp. Range	0 - 70°C [32 - 158°F]	
Liquid Temp. Range	0 - 60°C [32 - 140°F]	
Manifold / Air Connections	1”Rc Female Threaded – Flanged DN25 (J) Side Ports / ⅜” Ball valve	

Note: *Factors affecting a pumps stated liquid flow rate, suction lift & solids handling capabilities include, but are not limited to; pump size, diaphragm, ball valve & ball seat, type & materials of construction, air inlet pressure & air flow capability, liquid viscosity, specific gravity, slurry content, ambient & liquid temperature, liquid inlet & liquid outlet width, piping type, piping length & overall piping configuration. A minimum supply air pressure of 30 PSI (0.2 MPa) is required to operate the pump.*

Pump Performance Curves

Rubber Diaphragm Curves

250G□(J) 250V□(J) 250C□(J)

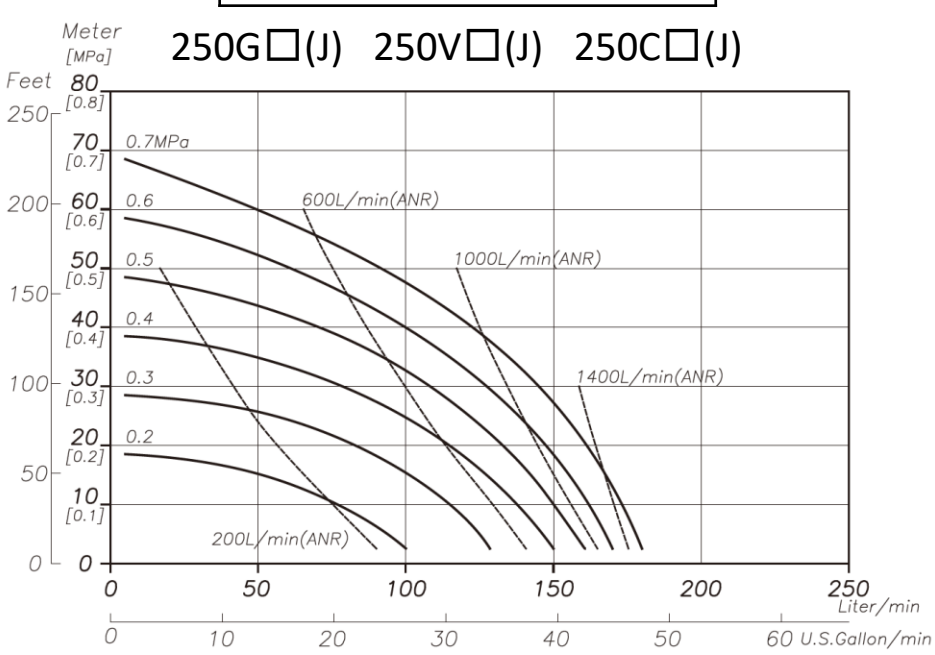

PTFE Diaphragm Curves

250GT(J)/GW(J) 250VT(J)/VW(J) 250CT(J)/CW(J)

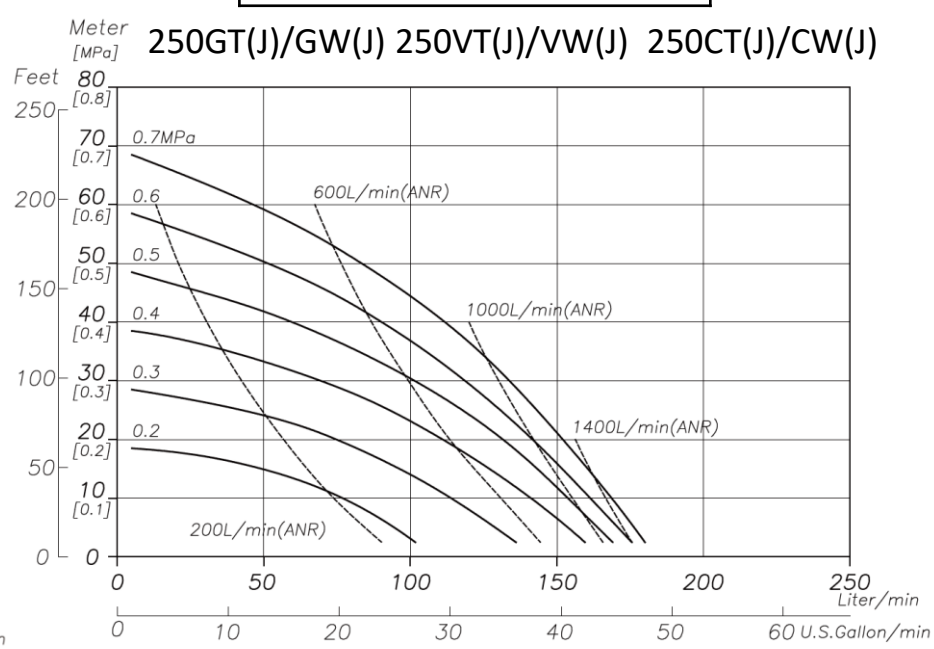

For more information about TC-X Pumps please contact: sales@iwaki.de
WWW.IWAKI.DE

Air Operated Double Diaphragm Pumps

IWAKI AIR EUROPE

Wetted Materials Of Construction

MODEL	250GC(J)	250GN(J)	250GE(J)	250GV(J)	250GT(J)	250GH(J)	250GS(J)	250GW(J)	250VE(J)	250VV(J)	250VT(J)	250VH(J)	250VS(J)	250VW(J)
Pump Wetted Parts	PPG								CFPVDF					
Diaphragm	CR	NBR	EPDM	FKM	PTFE	TPEE	TPO	PTFE-EPDM	EPDM	FKM	PTFE	TPEE	TPO	PTFE-EPDM
Valve Stopper	PPG								CFPVDF					
Ball Valve	CR	NBR	EPDM	FKM	PTFE	NBR	EPDM	PTFE	EPDM	FKM	PTFE	NBR	EPDM	PTFE
Valve Seat	PPG								CFPVDF					
Center Disk	PPG								CFPVDF					
Weight	10.0 kg (22.1 lbs)								12.5 kg (27.6 lbs)					

MODEL	250CC(J)-PC	250CN(J)-PC	250CE(J)-PC	250CV(J)-PC	250CT(J)-PC	250CH(J)-PC	250CS(J)-PC	250CW(J)-PC
Pump Wetted Parts	CFPP							
Diaphragm	CR	NBR	EPDM	FKM	PTFE	TPEE	TPO	PTFE-EPDM
Valve Stopper	CFPP							
Ball Valve	CR	NBR	EPDM	FKM	PTFE	NBR	EPDM	PTFE
Valve Seat	CFPP							
Center Disk	CFPP							
Weight	10.0 kg (22.1 lbs)							

Dimensional Drawings

250G☐J・C☐J-PC・VTJ ・VWJ Flange

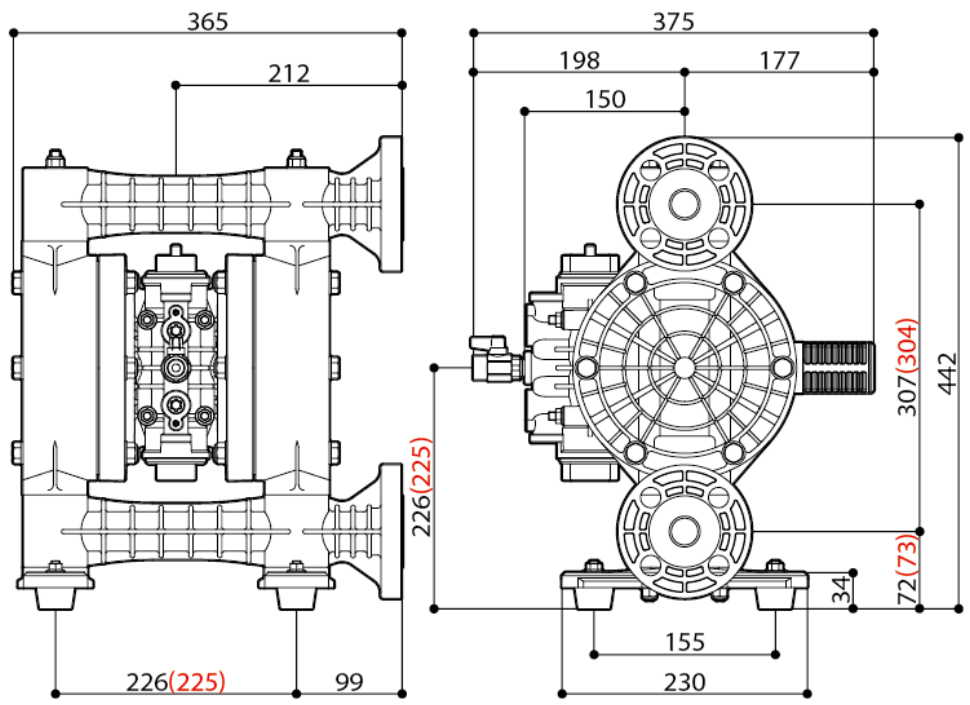

250G☐・C☐-PC・VT・VW Thread

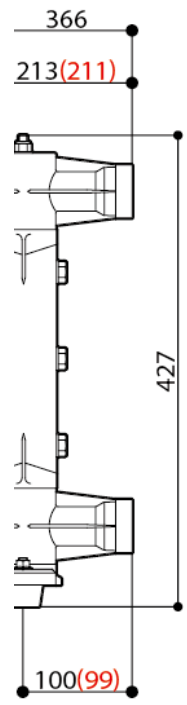

Nomenclature

Series TC-X | 250 | G | W | J | - | X

Special Options
☐: PPG Air Motor
PC: Conductive PP Motor
* Standard for CFPP Pump
* Option PVDF Pump for ATEX

Pump Connection Size
250 (1”)

Pump Body Material (Wetted)
G: PPG
V: CFPVDF
C: CFPP

Diaphragm Material
W: PTFE-EPDM
T: PTFE
C: CR
N: NBR
H: TPEE
S: TPO
E: EPDM
V: FKM

Connection Type
☐: Rc
N : NPT
J : JIS/DIN Flange
A : ANSI Flange

Air EcoRing



TC-X250VTJ / CTJ-PC
1” CF Polypropylene Pump
ATEX Conform

AODD Pump Capabilities

Self Priming	Variable Discharge Pressures	Inherently Safe Design
Run Dry	Transfer Liquid Slurries	Portable & Easy to Use
Run up to Dead Head	Transfer Large Sized Solids	Transfer Viscous Fluids
Variable Flow Rates	Handle Abrasives	Frequent Start Stop Operation
Shear Sensitivity	Transfer Chemicals	Powered by Compressed Air

CE LoopedC

Ex II2G ExhIIBT5Gb「0°C<Ta<70°C」
II2D ExhIIIBT100°CDb「0°C<Ta<70°C」

For more information about TC-X Pumps please contact: sales@iwaki.de
WWW.IWAKI.DE

JQA-QMA14279

091