Air Operated Double Diaphragm Pumps

IWAKI AIR EUROPE

TC-X250AN-SP32

1” Metallic Diaphragm Pump Data Sheet

Max. Flow Rate: 220 l/min (Rubber)
Max. Discharge Pressure: 0.7 MPa
Max. Slurry Size: 6.5 mm
Max. Suction Lift: Rubber Dry: 4.5 m Wet (Primed): 8.0 m
Liquid Connection Size: 1½” in * 1¼” out
Liquid Connection Configuration: Female Threaded Multi-ports
Pump Wetted Material Options: Aluminium
Air Motor Material: PPG (Optional CFPP & Aluminium)
Diaphragm Options: NBR
Check Valve Configuration: High Flow Ball Type Check Valves
Air Motor Model: Looped C-Spring Air Spool
Exhaust Configuration: External Plastic Exhaust Silencer (x1)
Base & Footprint: Heavy Duty Steel Legs & Fully Adjustable Footprint



TC-X250AN-SP32
220 l/min Max.

250AN-SP32 Metallic Pump Specifications	
Pump Model	**AN-SP32**
Max. Flow Rate	220 l/min [58.1 GPM]
Max. Solids Size	6.5 mm
Max. Discharge Pressure	0.7 MPa [100 psi]
Supply Air Pressure Range	0.2 - 0.7 MPa [30 - 100 psi]
Max. Suction Lift	Rubber Dry: 4.5 m Wet (Primed): 8.0 m
Max. Air Consumption	1800 l/min (ANR) [63.5 SCFM]
Max. Discharge Vol. Per Cycle	800 ml
Ambient Temp. Range	0 - 70°C [32 - 158°F]
Liquid Temp. Range	0-70°C [32-158°F] (MT Models; NBR/CR 0-70°C TPEE/EPDM 0-80°C FKM/TPO/PTFE 0-100°C)*
Connections: Manifolds / Air	1½” Rc Female Threaded Mid Port in, 1¼” top mid port out / ⅜” Rc Air Ball valve

*Operating in the condition a fluid temperature is at 70°C or above might cause an early degradation of performance and required to change the material of air motor seal parts. Please contact your nearest distributor for details.

Note: *Factors affecting a pumps stated liquid flow rate, suction lift & solids handling capabilities include, but are not limited to; pump size, diaphragm, ball valve & ball seat, type & materials of construction, air inlet pressure & air flow capability, liquid viscosity, specific gravity, slurry content, ambient & liquid temperature, liquid inlet & liquid outlet width, piping type, piping length & overall piping configuration. A minimum supply air pressure of 30 PSI (0.2 MPa) is required to operate the pump.*

Pump Performance Curves

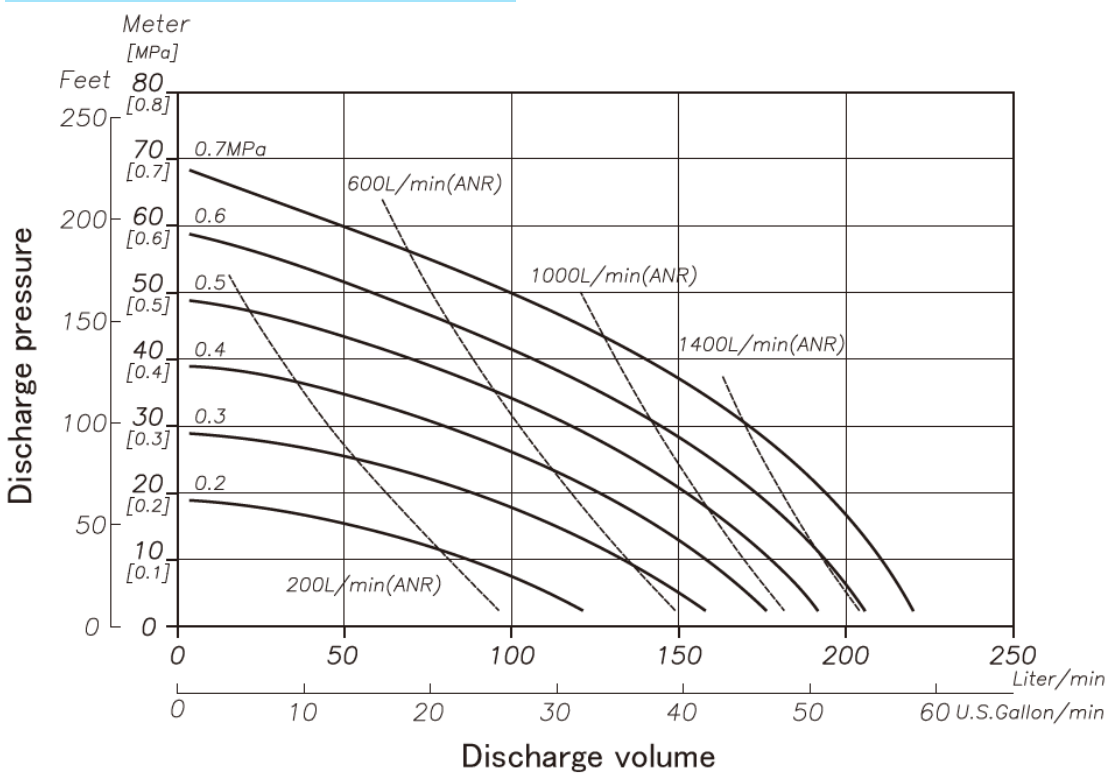

For more information about TC-X Pumps please contact: sales@iwaki.de
WWW.IWAKI.DE

Air Operated Double Diaphragm Pumps

IWAKI AIR EUROPE

Wetted Materials Of Construction

MODEL	250AN-SP32
Pump Wetted Parts	ADC12 * AC4C
Diaphragm	NBR
Valve Stopper	SCS14
Ball Valve	NBR
Valve Seat	NBR
Center Disk	SUS316
Weight	11. kg (24.25 lbs)



Dimensional Drawings

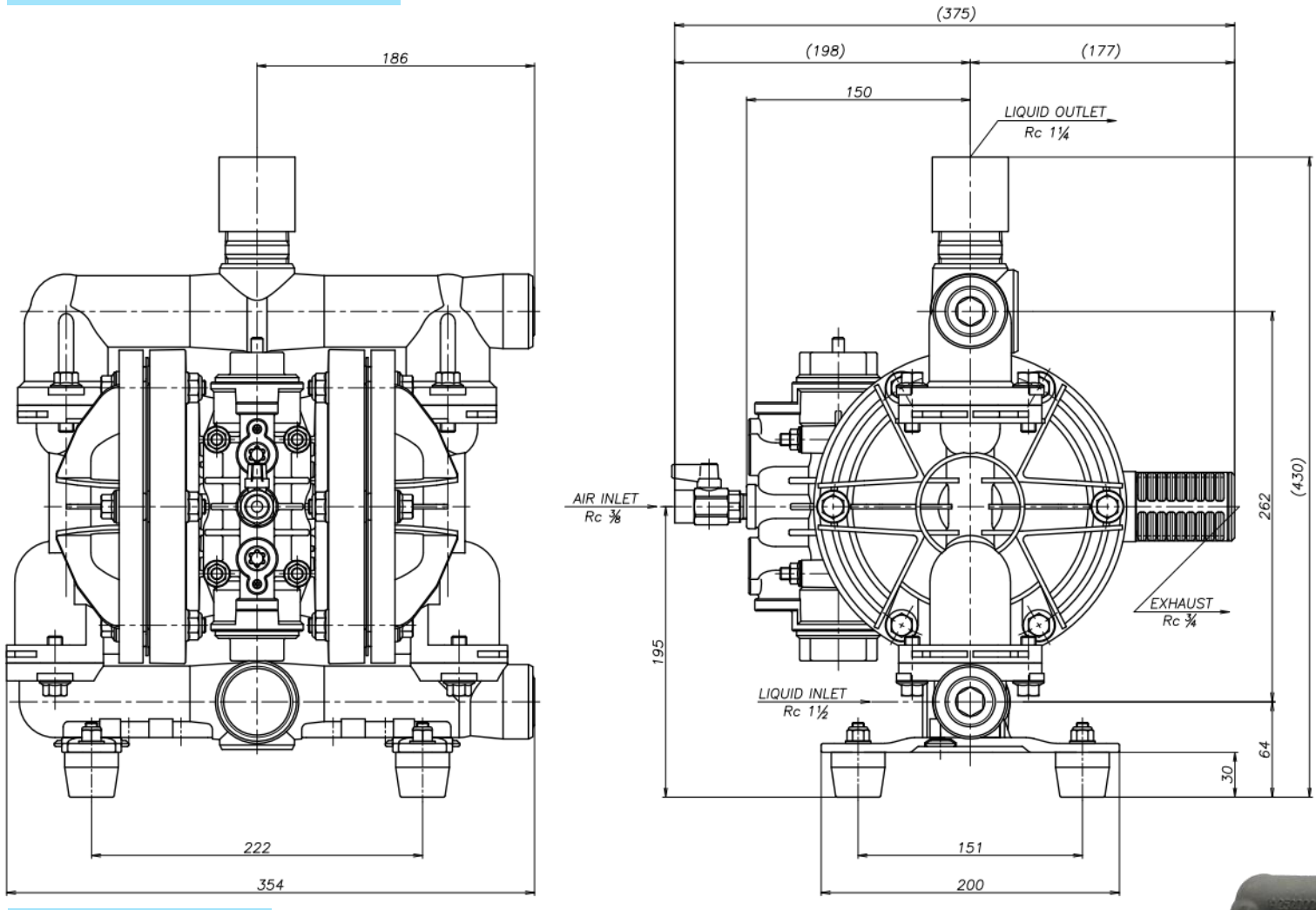

Nomenclature

Series TC-X | 250 | A | N | | - | SP32

- 250: Pump Connection Size 250 (1”)
- A: Pump Body Material (Wetted) A: Al
- N: Diaphragm Material N : NBR
- (blank): Connection Type ☐: Rc N: NPT
- SP32: SPACER KIT 32



AODD Pump Capabilities

Self Priming	Variable Discharge Pressures	Inherently Safe Design
Run Dry	Transfer Liquid Slurries	Portable & Easy to Use
Run up to Dead Head	Transfer Large Sized Solids	Transfer Viscous Fluids
Variable Flow Rates	Handle Abrasives	Frequent Start Stop Operation
Shear Sensitivity	Transfer Chemicals	Powered by Compressed Air

CE LoopedC

Ex II2G ExhIIBT5Gb「0°C<Ta<70°C」
II2D ExhIIIBT100°CDb「0°C<Ta<70°C」

For more information about TC-X Pumps please contact: sales@iwaki.de
WWW.IWAKI.DE

JQA-QMA14279

091