Air Operated Double Diaphragm Pumps

IWAKI AIR EUROPE

TC-X250ET(J)-PC/EW(J)-PC

LoopedC

Air EcoRing

1” Industrial Grade Conductive PTFE Pumps Data Sheet

Max. Flow Rate: 150 l/min
Max. Slurry Size: 3 mm
Liquid Connection Size: 1” Thread option (25A)
Liquid Connection Configuration: Female Threaded / (Flanged Side Ports)
Pump Wetted Material Options: Conductive PTFE / PFA
Air Motor Material: CFPP (Conductive PP)
Diaphragm Options: PTFE-EPDM “W”, PTFE
Check Valve Configuration: Ball Check Valves
Air Motor Model: Looped C-Spring Air Spool
Exhaust Configuration: External Air Exhaust Silencer
Torque Reinforcement Plates: SUS304
Base & Footprint: S US304 Base Plate & Rubber Feet



TC-X250ET-PC/EW-PC
1” Industrial Grade Conductive PTFE Pump
150 l/min max.

Standard 250ET Pump Specifications

Pump Model	250ET-PC / 250EW-PC	250ETJ-PC / 250EWJ-PC
Max. Flow Rate	150 l/min [16.9 GPM]	
Max. Discharge Vol. Per Cycle	500 ml	
Max. Solids Size	3.0 mm	3.0 mm
Supply Air Pressure Range	0.2 - 0.5 MPa [30 - 70 psi]	
Max. Discharge Pressure	0.5 MPa [70 psi]	
Max. Air Consumption	1500 l/min (ANR) [53 SCFM]	
Max. Suction Lift	Dry: 2.0 m Wet (Primed): 8.0 m	
Connections: manifolds / Air	1” Rc Threaded Side Ports / ⅜” Rc Ball valve	25A Flanged Side Ports / ⅜” Rc Ball valve
Check Valve Configuration	Ball Type Check Valves	
Wetted Body Material	Conductive PTFE (Conductive Polytetrafluoroethylene)	
Diaphragm Material	High Purity PTFE (Polytetrafluoroethylene)	
Ball Valve, Seat & Guide Material	High Purity PTFE (Polytetrafluoroethylene)	
Wetted Centre Discs Material	High Purity PFA encapsulated SUS316 (Perfluoroalkoxy Alkane)	
Liquid Seals Material	High Purity PTFE (Polytetrafluoroethylene)	
Ambient Temp. Range	0 - 70°C [32 - 158°F]	
Liquid Temp. Range	0 - 60°C [32 - 140°F]	
Max. Noise Level	86 dB (ISO 1996 A weighted Sound Pressure)	
Net Weight	31.5 kg [69.4 lbs]	32.0 kg [70.5 lbs]

Operation Note: *Factors affecting a pumps stated liquid flow rate, suction lift & solids handling capabilities include, but are not limited to; pump size, diaphragm, ball valve & ball seat, type & materials of construction, air inlet pressure & air flow capability, liquid viscosity, specific gravity, slurry content, ambient & liquid temperature, liquid inlet & liquid outlet width, piping type, piping length & overall piping configuration. A minimum supply air pressure is required to operate the pump.*

Pump Performance Curve

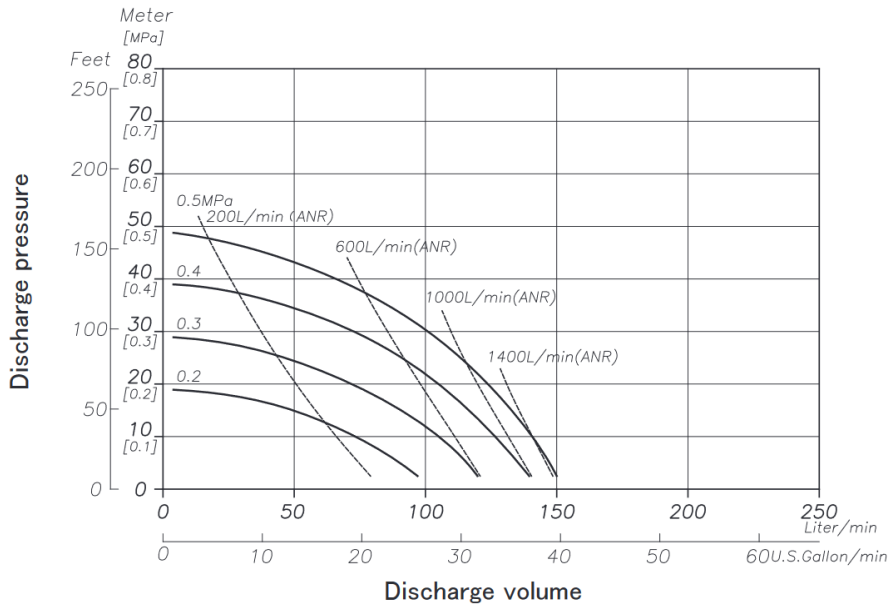

For more information about TC-X Pumps please contact: sales@iwaki.de
WWW.IWAKI.DE

Air Operated Double Diaphragm Pumps

Wetted Materials Of Construction

MODEL	250ET(J)-PC	250EW(J)-PC
Pump Wetted Parts	Conductive PTFE/PFA	
Diaphragm	PTFE	PTFE-EPDM
Valve Stopper	PTFE	
Ball Valve	PTFE	
Valve Seat	PTFE	
Center Disk	PFA	
Weight	31.5kg [69.4 lbs]	(32.0kg [70.5])

Dimensional Drawings

TC-X250ET-PC / EW-PC

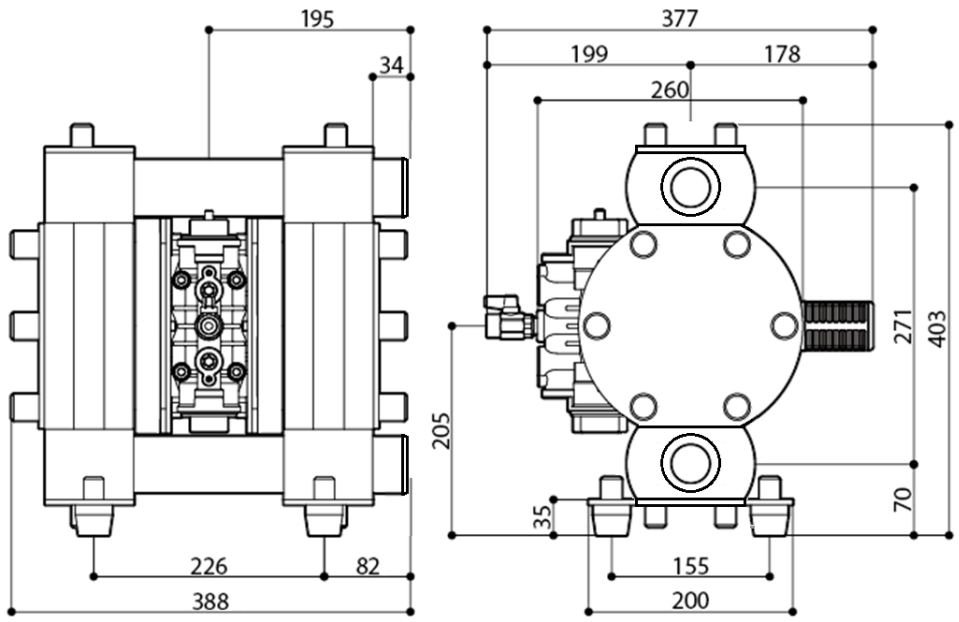

TC-X250ETJ-PC / EWJ-PC

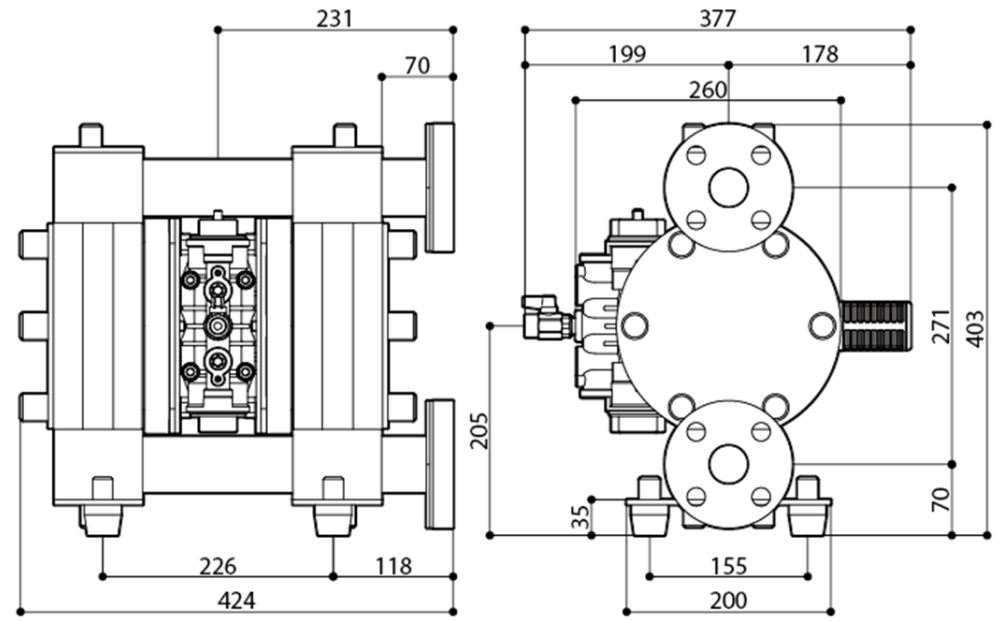

Nomenclature

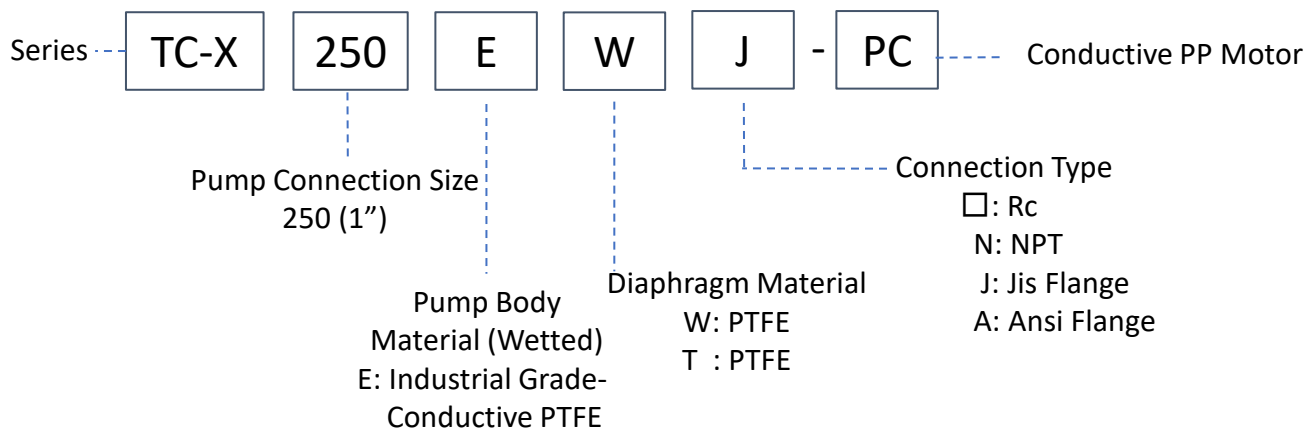

AODD Pump Capabilities

Self Priming	Variable Discharge Pressures	Inherently Safe Design
Run Dry	Transfer Liquid Slurries	Portable & Easy to Use
Run up to Dead Head	Transfer Large Sized Solids	Transfer Viscous Fluids
Variable Flow Rates	Handle Abrasives	Frequent Start Stop Operation
Shear Sensitivity	Transfer Chemicals	Powered by Compressed Air

CE LoopedC

Ex II2G ExhIIBT5Gb「0°C<Ta<70°C」
II2D ExhIIIBT100°CDb「0°C<Ta<70°C」

For more information about TC-X Pumps please contact: sales@iwaki.de
WWW.IWAKI.DE

JQA-QMA14279

091