Air Operated Double Diaphragm Pumps

IWAKI AIR EUROPE

TC-X250ST-FDA / SW-FDA

1” Metallic Diaphragm Pump FDA-compliant Data Sheet

Max. Flow Rate: 190 l/min
Max. Discharge Pressure: 0.7 MPa
Max. Slurry Size: 6.5 mm
Max. Suction Lift: Dry: 1.5 m Wet (Primed): 8.0 m
Liquid Connection Size: Ferrule 2.0s (Tri-clamp)
Pump Wetted Material Options: Stainless Steel-SCS14 electro-polished
Air Motor Material: PPG, optional CFPP for ATEX
Diaphragm Options: PTFE-EPDM “W”, PTFE “T”
Check Valve Configuration: High Flow Ball Type Check Valves
Air Motor Model: Looped C-Spring Air Spool
Exhaust Configuration: External Plastic Exhaust Silencer (x1)
Base & Footprint: Heavy Duty Steel Legs & Fully Adjustable Footprint



TC-X250S□-FDA
1” SUS Pump
190 l/min Max.

250S□-FDA SCS14 Electro-Polished Pump Specifications	
Pump Model	**ST-FDA, SW-FDA**
Max. Flow Rate	190 l/min [50.2 GPM]
Max. Solids Size	6.5 mm
Max. Discharge Pressure	0.7 MPa [100 psi]
Supply Air Pressure Range	0.2 - 0.7 MPa [30 - 100 psi]
Max. Suction Lift	Dry: 1.5 m Wet (Primed): 8.0 m
Max. Air Consumption	1600 l/min (ANR) [56.5 SCFM]
Max. Discharge Vol. Per Cycle	650 ml
Ambient Temp. Range	0 - 70°C [32 - 158°F]
Liquid Temp. Range	PTFE 0-100°C [32 - 212°F]
Connections: Manifolds / Air	Ferrule 2.0s (Tri-clamp) Centre Ports / 3/8” Rc Air Ball valve

*Operating in the condition a fluid temperature is at 70°C or above might cause an early degradation of performance and required to change the material of air motor seal parts. Please contact your nearest distributor for details.

Note: *Factors affecting a pumps stated liquid flow rate, suction lift & solids handling capabilities include, but are not limited to; pump size, diaphragm, ball valve & ball seat, type & materials of construction, air inlet pressure & air flow capability, liquid viscosity, specific gravity, slurry content, ambient & liquid temperature, liquid inlet & liquid outlet width, piping type, piping length & overall piping configuration. A minimum supply air pressure of 30 PSI (0.2 MPa) is required to operate the pump.*

Pump Performance Curves

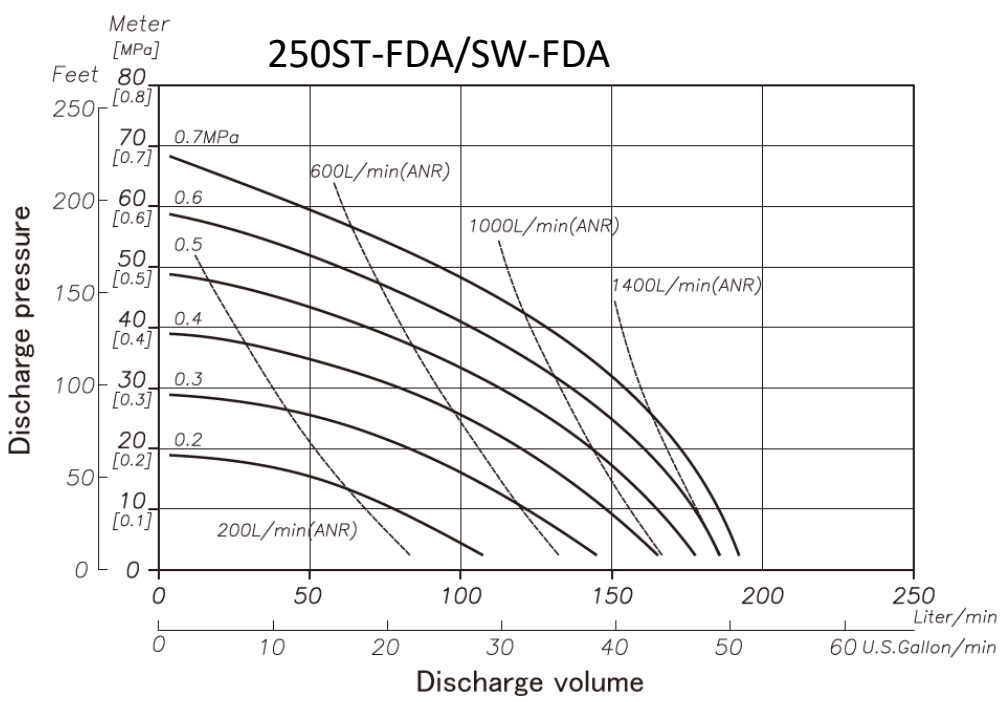





Standard Grey PPG motor
Optional conductive CFPP motor black for ATEX

For more information about TC-X Pumps please contact: sales@iwaki.de
WWW.IWAKI.DE

Air Operated Double Diaphragm Pumps

IWAKI AIR EUROPE

Wetted Materials Of Construction

MODEL	250ST-FDA	250SW-FDA
Pump Wetted Parts	SCS14 Electro-polished	
Diaphragm	PTFE	PTFE-EPDM
Valve Stopper	SCS14 Electro-polished	
Ball Valve	PTFE	
Valve Seat	PTFE	
Center Disk	SUS316 Electro-polished	
Weight	20.5 kg [45.2 lbs)]	



TC-X250SW-FDA:
W-Diaphragms
For easy cleaning
Long lifetime

Dimensional Drawings

250S☐-FDA

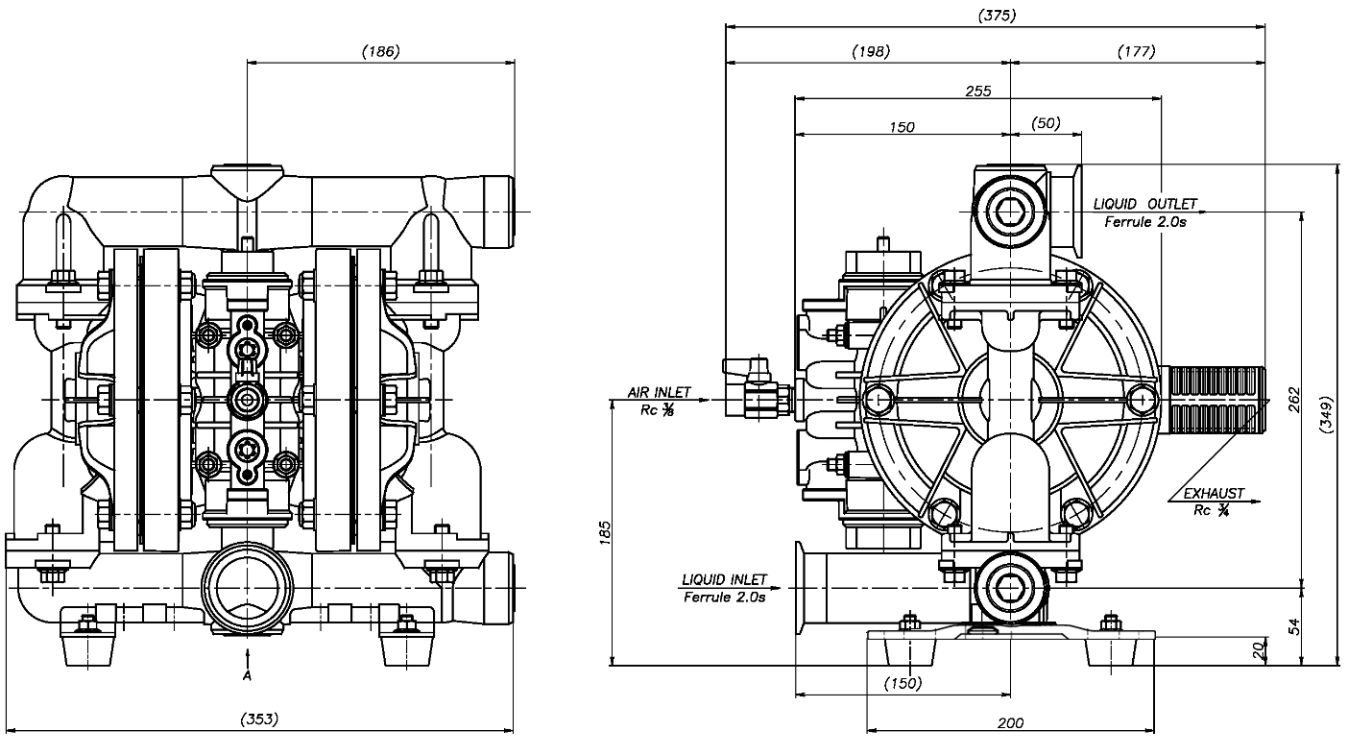



Ferrule Food connections
(Tri-Clamp)

Nomenclature

Series TC-X | 250 | S | W | - | FDA

- 250: Pump Connection Size
- S: Pump Body Material (Wetted) — S: SCS14 –(SUS316) Electro-polished
- W: Diaphragm Material — W: PTFE-EPDM; T : PTFE
- FDA: Connection Type: Ferrule 2.0s (Tri-Clamp); Wetted material: SCS14 Electro-polished; Wetted center disk: Capped type (Only for ST)

AODD Pump Capabilities

Self Priming	Variable Discharge Pressures	Inherently Safe Design
Run Dry	Transfer Liquid Slurries	Portable & Easy to Use
Run up to Dead Head	Transfer Large Sized Solids	Transfer Viscous Fluids
Variable Flow Rates	Handle Abrasives	Frequent Start Stop Operation
Shear Sensitivity	Transfer Chemicals	Powered by Compressed Air

II2G ExhIIBT5Gb「0°C<Ta<70°C」
II2D ExhIIIBT100°CDb「0°C<Ta<70°C」

JQA-QMA14279

091

For more information about TC-X Pumps please contact: sales@iwaki.de
WWW.IWAKI.DE