# Air Operated Double Diaphragm Pumps

IWAKI AIR EUROPE

# TC-X250SWFR-A Sanitary Pump

## 1” Sanitary Pump Data Sheet

LoopedC

**Max. Flow Rate: 180** l/min
**Liquid Connection Size:** ISO 1.5s ≈ 3A 1½”
**Liquid Connection Configuration:** ISO / 3A Ferrule
**Max. Slurry Size: 3**.0 mm or less (Optional Flap valves for 20mm or less)
**Max. Suction Lift:** Dry: 3.5 m.  Wet (Primed): 8.0 m
**Max. Discharge Pressure:** 0.7 MPa
**Check Valve Configuration:** Ball Type Check Valves PTFE FDA Complaint
**Pump Wetted Material Options:** Electropolished Stainless Steel FDA Compliant
**Diaphragm Options:** PTFE/EPDM bonded 1pc.  FDA Compliant
**Air Motor Material:** Electroless nickel plated Aluminium
**Air Motor Model:** Looped C-Spring Air Spool
**Exhaust Configuration:** External Plastic Exhaust Silencer (x1)
**Base & Footprint:** Slidable Base



FDA

**TC-X250SWFR-A**
1” SUS 316 Sanitary Pump
180 l/min

**Description & Features:** Tri-clamp ferrule connections. Metallic AODD Pumps fitted with looped C® Air Spool, Ekonol® Seal Rings & Fully independent Pilot Valves for increased performance, reliability & extended life cycle.

| 250 Sanitary Pump Specifications | |
|---|---|
| **Pump Model** | **TC-X250SWFR-A** |
| **Max. Flow Rate** | 180 l/min [47.6 GPM] |
| **Max. Solids Size** | 3.0 mm or less [Optional 20mm with special flap valves] |
| **Max. Discharge Pressure** | 0.7 MPa [100 psi] |
| **Supply Air Pressure Range** | 0.2 - 0.7 MPa [30 - 100 psi] |
| **Max. Suction Lift** | Dry: 3.5 meters.  Wet (Primed): 8.0 meters |
| **Max. Air Consumption** | 1600 l/min (ANR) [56.5 SCFM] |
| **Max. Discharge Vol. Per Cycle** | 600 ml |
| **Ambient Temp. Range** | 0 - 70°C [32 - 158°F] |
| **Liquid Temp. Range** | 0 - 80°C [32 - 178°F] |
| **Connections: Manifolds / Air** | ISO 1.5s ≈ 3A 1½” Ferrule / ⅜” Ball valve |

***Note:*** *Factors affecting a pumps stated liquid flow rate, suction lift & solids handling capabilities include, but are not limited to; pump size, diaphragm, ball valve & ball seat, type & materials of construction, air inlet pressure & air flow capability, liquid viscosity, specific gravity, slurry content, ambient & liquid temperature, liquid inlet & liquid outlet width, piping type, piping length & overall piping configuration. A minimum supply air pressure of 30 PSI (0.2 MPa) is required to operate the pump.*

## Pump Performance Curves

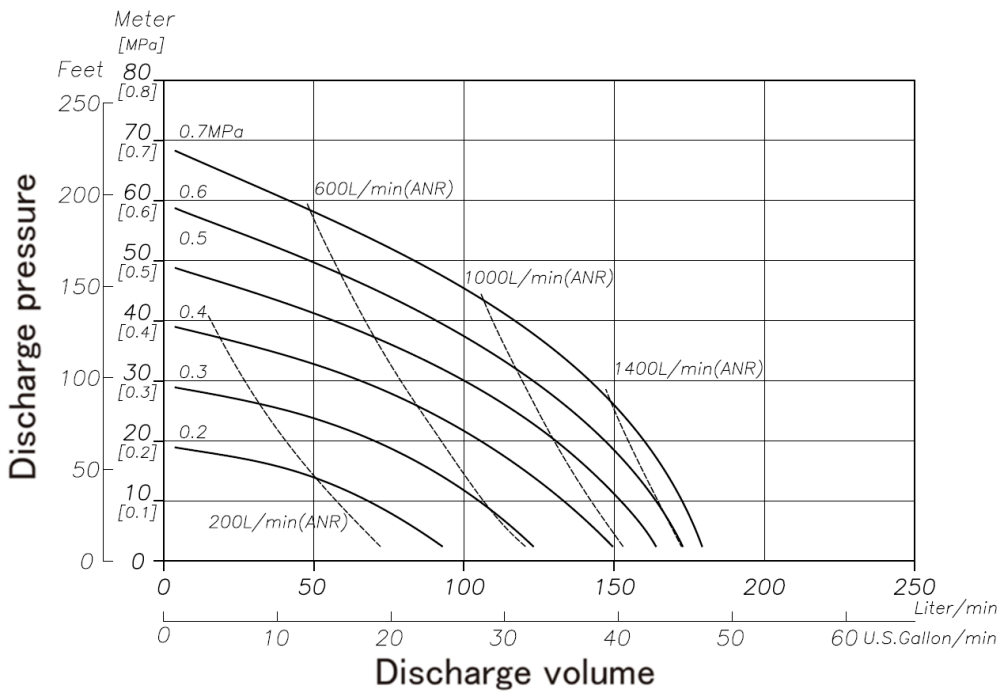


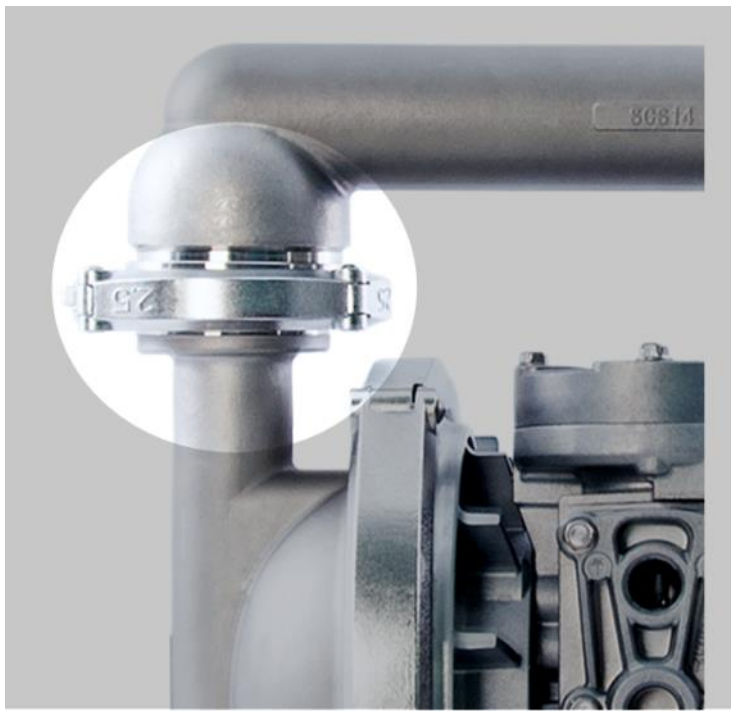

**Eccentric Alignment Connections**

***For more information about TC-X Pumps please contact:*** sales@iwaki.de

# Air Operated Double Diaphragm Pumps

## Wetted Materials Of Construction

| | |
|---|---|
| MODEL | 250SWFR-A |
| Pump Wetted Parts | SUS 316 |
| Diaphragm | PTFE/EPDM 1 Pc BONDED |
| Ball valve | PTFE |
| Packing | PTFE |
| Weight | 19.5 kg [43.0 lbs] |

## Dimensional Drawings

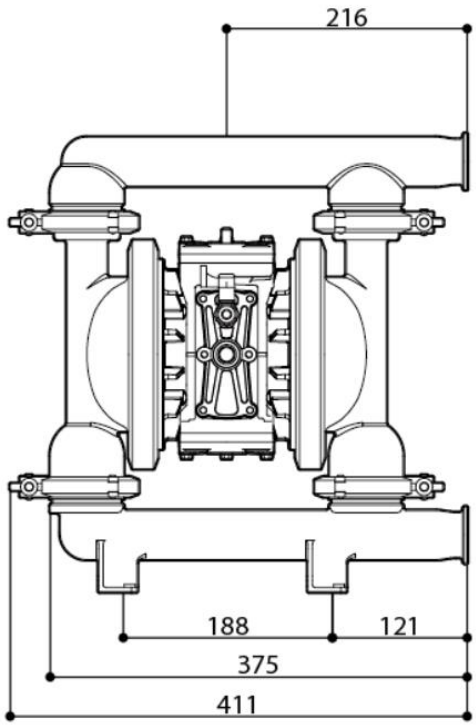


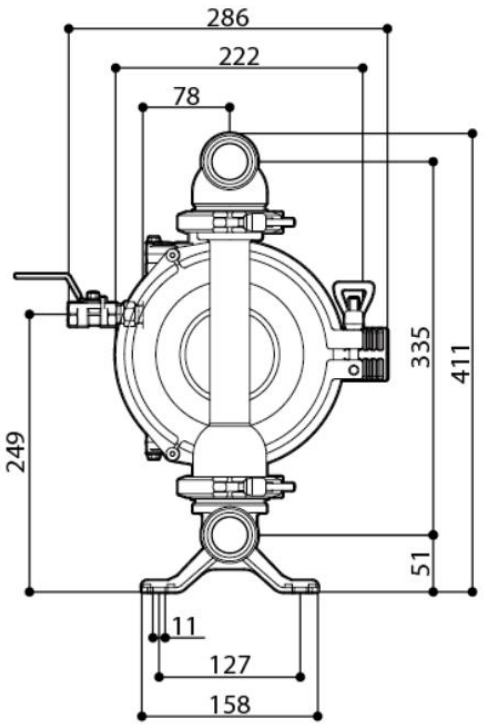




**Flap valve option Available**
**TC-X250SWFR-FV-A**

## Nomenclature

Series TC-X | 250 | S | W | F | R - A

- 250: Pump Connection Size 250 (1.5s)
- S: Pump Body Material (Wetted) S: SUS 316
- W: Diaphragm Material T: PTFE/EPDM Bonded
- F: Connection Type F: Ferrule
- R: Clamped Pump
- A: Aluminium Motor E-Nickel plated



**One piece easy clean PTFE sheet**
**With a bonded EPDM rubber backing**

## AODD Pump Capabilities

| | | |
|---|---|---|
| Self Priming | Variable Discharge Pressures | Inherently Safe Design |
| Run Dry | Transfer Liquid Slurries | Portable & Easy to Use |
| Run up to Dead Head | Transfer Large Sized Solids | Transfer Viscous Fluids |
| Variable Flow Rates | Handle Abrasives | Frequent Start Stop Operation |
| Shear Sensitivity | Transfer Chemicals | Powered by Compressed Air |

II2G ExhIIBT5Gb「0°C<Ta<70°C」
II2D ExhIIIBT100°CDb「0°C<Ta<70°C」

JQA-QMA14279

091

***For more information about TC-X Pumps please contact:*** sales@iwaki.de