Air Operated Double Diaphragm Pumps

TC-X250TT□/TW□

1” Industrial Grade PTFE Pumps Data Sheet

Max. Flow Rate: 150 l/min
Max. Slurry Size: 3 mm
Liquid Connection Size: 25A (1” thread option)
Liquid Connection Configuration: Flanged Side Ports / (Female Threaded)
Pump Wetted Material Options: Industrial grade PTFE/PFA
Air Motor Material: PPG (Glass Filled Polypropylene Plastic)
Diaphragm Options: PTFE-EPDM “W”, PTFE
Check Valve Configuration: Ball Check Valves
Air Motor Model: Looped C-Spring Air Spool
Exhaust Configuration: External Air Exhaust Silencer
Torque Reinforcement Plates: SUS304
Base & Footprint: SUS304 Base Plate & Rubber Feet



TC-X250TTJ/TWJ
1” Industrial Grade PTFE Pump
150 l/min Max

Standard 250TT Pump Specifications		
Pump Model	**250TTJ/TWJ**	**250TT/TW**
Max. Flow Rate	150 l/min [39.6 GPM]	
Max. Discharge Vol. Per Cycle	500 ml	
Max. Solids Size	3.0 mm	3.0 mm
Supply Air Pressure Range	0.2 - 0.5 MPa [30 - 70 psi]	
Max. Discharge Pressure	0.5 MPa [70 psi]	
Max. Air Consumption	1500 l/min (ANR) [53 SCFM]	
Max. Suction Lift	Dry: 2.0 m Wet (Primed): 8.0 m	
Connections: Manifolds / Air	25JIS/DN Flanged Side Ports / ⅜” Rc Ball valve	1” Rc Threaded Side Ports / ⅜” Rc Ball valve
Check Valve Configuration	Ball Type Check Valves	
Wetted Body Material	High Purity PTFE (Polytetrafluoroethylene)	
Diaphragm Material	High Purity PTFE (Polytetrafluoroethylene)	
Ball Valve, Seat & Guide Material	High Purity PTFE (Polytetrafluoroethylene)	
Wetted Centre Discs Material	High Purity PFA encapsulated SUS316 (Perfluoroalkoxy alkane)	
Liquid Seals Material	High Purity PTFE (Polytetrafluoroethylene)	
Ambient Temp. Range	0 - 70°C [32 - 158°F]	
Liquid Temp. Range	0 - 60°C [32 - 140°F]	
Max. Noise Level	86 dB (ISO 1996 A weighted Sound Pressure)	
Net Weight	32.0 kg [70.5 lbs]	31.5 kg [69.4 lbs]

Operation Note: *Factors affecting a pumps stated liquid flow rate, suction lift & solids handling capabilities include, but are not limited to; pump size, diaphragm, ball valve & ball seat, type & materials of construction, air inlet pressure & air flow capability, liquid viscosity, specific gravity, slurry content, ambient & liquid temperature, liquid inlet & liquid outlet width, piping type, piping length & overall piping configuration. A minimum supply air pressure is required to operate the pump.*

Pump Performance Curve

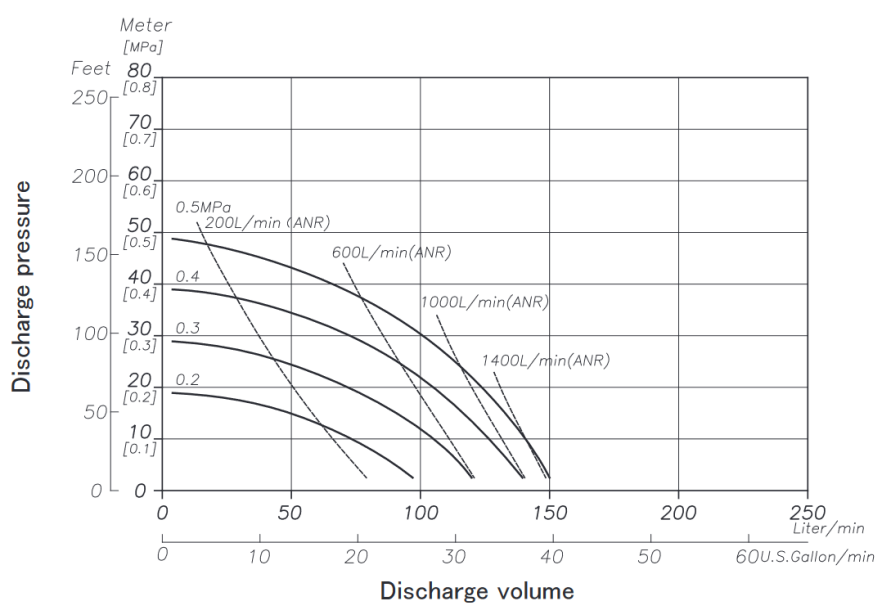

For more information about TC-X Pumps please contact: sales@iwaki.de
WWW.IWAKI.DE

Air Operated Double Diaphragm Pumps

IWAKI AIR EUROPE

Wetted Materials Of Construction

MODEL	250TT□	250TW□
Pump Wetted Parts	PTFE/PFA	
Diaphragm	PTFE	PTFE-EPDM
Valve Stopper	PTFE	
Ball Valve	PTFE	
Valve Seat	PTFE	
Center Disk	PFA	
Weight	Rc - 31.5kg [69.4 lbs] / J(DN) - 32.0kg (70.5 lbs)	

Dimensional Drawings

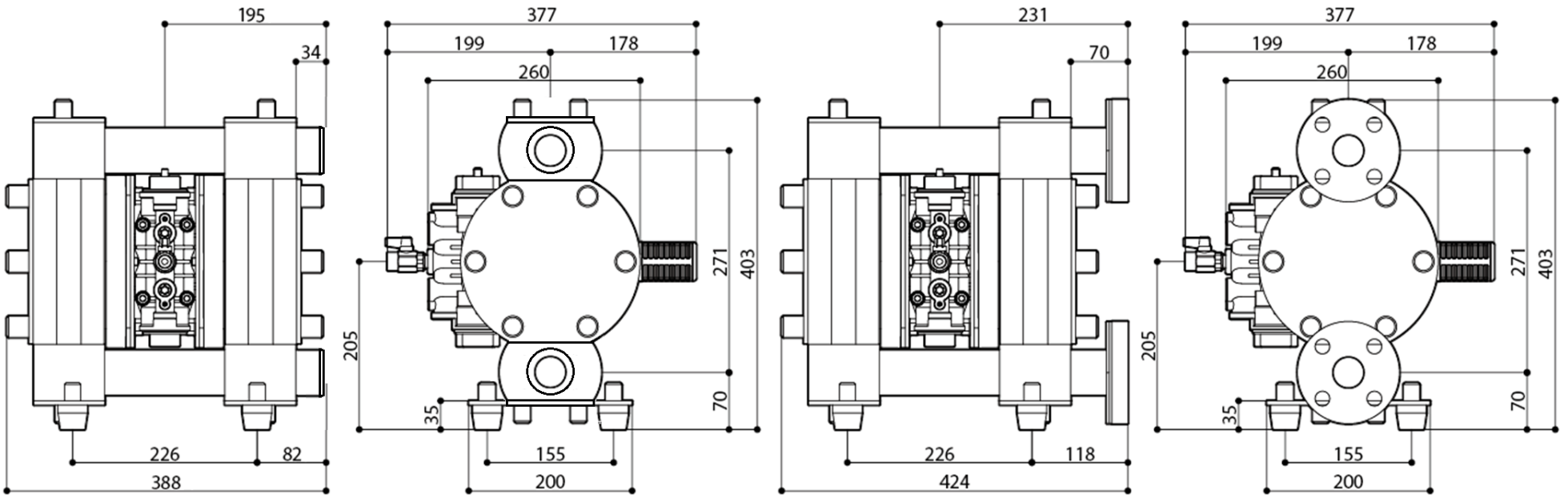

Nomenclature

Series TC-X | 250 | T | T | N | - | X — Special Options

- 250: Pump Connection Size 250 (1”)
- T: Pump Body Material (Wetted) T: Industrial Grade PTFE
- T: Diaphragm Material W: PTFE-EPDM T : PTFE
- N: Connection Type □: Rc N: NPT J: Jis Flange A: Ansi Flange

AODD Pump Capabilities

Self Priming	Variable Discharge Pressures	Inherently Safe Design
Run Dry	Transfer Liquid Slurries	Portable & Easy to Use
Run up to Dead Head	Transfer Large Sized Solids	Transfer Viscous Fluids
Variable Flow Rates	Handle Abrasives	Frequent Start Stop Operation
Shear Sensitivity	Transfer Chemicals	Powered by Compressed Air

CE LoopedC

Ex II2G ExhIIBT5Gb「0°C<Ta<70°C」
II2D ExhIIIBT100°CDb「0°C<Ta<70°C」

For more information about TC-X Pumps please contact: sales@iwaki.de
WWW.IWAKI.DE

JQA-QMA14279 091