TC-X400/500/800-M-HP Metallic

1½", 2" & 3" Heavy Duty Metallic 2:1

High Pressure Diaphragm Pump Data Sheet

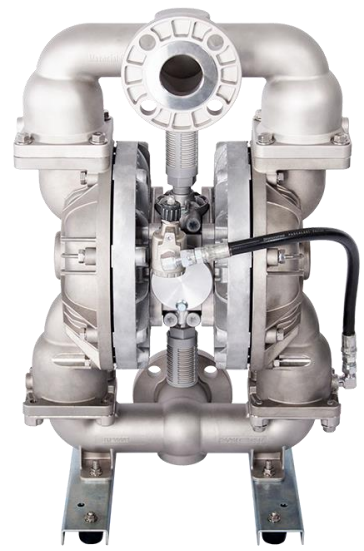

TC-X500S□J-M-HP
2" SUS Pump 2:1. 375 L/min.

Max Flow Rate: 220l/min[TC-X400], 370l/min[TC-X500] & 400l/m[TC-X800]. (Only Rubber fitted)
Liquid Connection Size: Dual flange + inner thread Centre Ports.
Max Discharge Pressure: 1.6 MPa. (Rubber diaphragms only)
Check Valve Configuration: Ball Type Check Valves.
Pump Wetted Material Options: Aluminium, Stainless Steel, Cast Iron.
Diaphragm Material Options: CR, NBR, EPDM, FKM.
Air Motor Material: Aluminium. (Optional PTFE coated)
Description: Heavy Duty high pressure Metallic AODD Pumps available in Alu, SUS, FC.
Mechanical Coil Spring Air Spool. Aluminium Air Motor. Ball Check Valves.
Dual Connection Threaded Flanged Centre Ports. External Plastic Silencer (×2). SUS Steel Base.

Mechanical HD Spool

2:1 High Pressure HD Metallic Pump Specifications			
Pump Model	**A□J-M-HP, S□J-M-HP, F□J-M-HP**		
	TC-X400	**TC-X500**	**TC-X800**
Diaphragms	CR(Neoprene), NBR(Buna-N), EPDM(Nordel), FKM(Viton)		
Max Flow Rate	220 L/min [118.9 GPM]	370 L/min [118.9 GPM]	400 L/min [105.7 GPM]
Max Solids Size	8.0 mm		10.0 mm
Max Discharge Pressure	1.6 MPa [232 psi]		
Supply Air Pressure Range	0.1 – 0.85 MPa [14 - 125 psi]		
Max Suction Lift	Rubber Dry: 4.5 meters. Wet (Primed): 6.5 meters.		
Max Air Consumption	3700 L/min (ANR) [130.65 SCFM]	5300 L/min (ANR) [187.14 SCFM]	5500 L/min (ANR) [194.21 SCFM]
Max Discharge Vol Per Cycle	1200 mL	1800 mL	3200 mL
Ambient Temp Range	0 – 70°C [32 – 158°F]		
Liquid Temp Range	NBR/CR 0–70°C [32–158°F] EPDM 0–80°C [32–176°F] FKM 0–100°C [32–212°F]		
Connections: Manifolds / Air	DN40 + 1,5" Rc / ¾" Ball valve	DN/AN50 + 2" Rc / ¾" Ball valve	DN/AN80 + 3" Rc / ¾" Ball valve

*Operating in the condition a fluid temperature is at 70°C or above might cause an early degradation of performance and required to change the material of air motor seal parts. Please contact your nearest distributor for details.

Note: *Factors affecting a pumps stated liquid flow rate, suction lift & solids handling capabilities include but are not limited to; pump size, diaphragm, ball valve & ball seat, type & materials of construction, air inlet pressure & air flow capability, liquid viscosity, specific gravity, slurry content, ambient & liquid temperature, liquid inlet & liquid outlet width, piping type, piping length & overall piping configuration. A minimum supply air pressure of 30 PSI (0.2 MPa) is required to operate the pump.*

Wetted Materials Of Construction

MODEL	400ACJ-M-HP 500ACJ-M-HP 800ACJ-M-HP	400ANJ-M-HP 500ANJ-M-HP 800ANJ-M-HP	400AEJ-M-HP 500AEJ-M-HP 800AEJ-M-HP	400AVJ-M-HP 500AVJ-M-HP 800AVJ-M-HP	400SCJ-M-HP 500SCJ-M-HP 800SCJ-M-HP	400SNJ-M-HP 500SNJ-M-HP 800SNJ-M-HP	400SEJ-M-HP 500SEJ-M-HP 800SEJ-M-HP	400SVJ-M-HP 500SVJ-M-HP 800SVJ-M-HP	400FCJ-M-HP 500FCJ-M-HP 800FCJ-M-HP	400FNJ-M-HP 500FNJ-M-HP 800FNJ-M-HP	400FEJ-M-HP 500FEJ-M-HP 800FEJ-M-HP	400FVJ-M-HP 500FVJ-M-HP 800FVJ-M-HP
Pump wetted Parts	ADC12 . AC4C				SCS14 (316)				S45C			
Diaphragm	CR	NBR	EPDM	FKM	CR	NBR	EPDM	FKM	CR	NBR	EPDM	FKM
Ball valve	CR	NBR	EPDM	FKM	CR	NBR	EPDM	FKM	CR	NBR	EPDM	FKM
Valve Seat	CR	NBR	EPDM	FKM	CR	NBR	EPDM	FKM	CR	NBR	EPDM	FKM
Center Disk	A5056				SUS316				SS400 (800 SERIES SUS316)			
Weight 400	31.0kg (68.3 lbs)				56.0kg (123.5 lbs)				56.0kg (123.5 lbs)			
Weight 500	47.0kg (103.6 lbs)				74.0kg (163.1 lbs)				74.0kg (163.1 lbs)			
Weight 800	63.5kg (140.0 lbs)				132.5kg (292.1 lbs)				132.5kg (292.1 lbs)			

Nomenclature

Series: TC-X | 400 | A | C | J | - | M | HP (High Pressure)

- **400** — Pump Size: 400 1½", 500 2", 800 3"
- **A** — Pump Body Material(Wetted): A: Al, S: SUS, F: Cast Iron
- **C** — Diaphragm Material: C: CR, N: NBR, E: EPDM, V: FKM
- **J** — Connection Type:
  - 400 series: J: JIS/Din40 Flange with internal Rc thread; A: ANSI Flange with internal NPT thread
  - 500 series: J: JIS/Din50/ANSI Flange with internal Rc thread; A: JIS/Din50/ANSI Flange with internal NPT thread
  - 800 series: J: JIS/Din80/ANSI Flange with internal Rc thread; A: JIS/Din80/ANSI Flange with internal NPT thread
- **M**: M: Mechanical Air Motor
- **HP**: High Pressure

For more information about TC-X Pumps please contact: sales@iwaki.de
WWW.IWAKI.DE

Air Operated Double Diaphragm Pumps

IWAKI AIR EUROPE

Pump Performance Curves

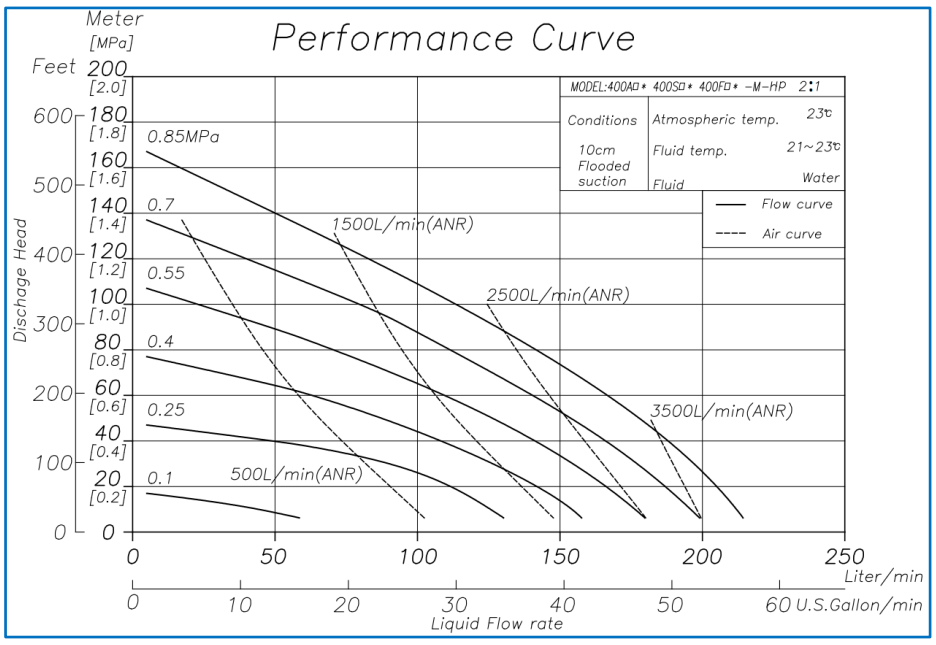

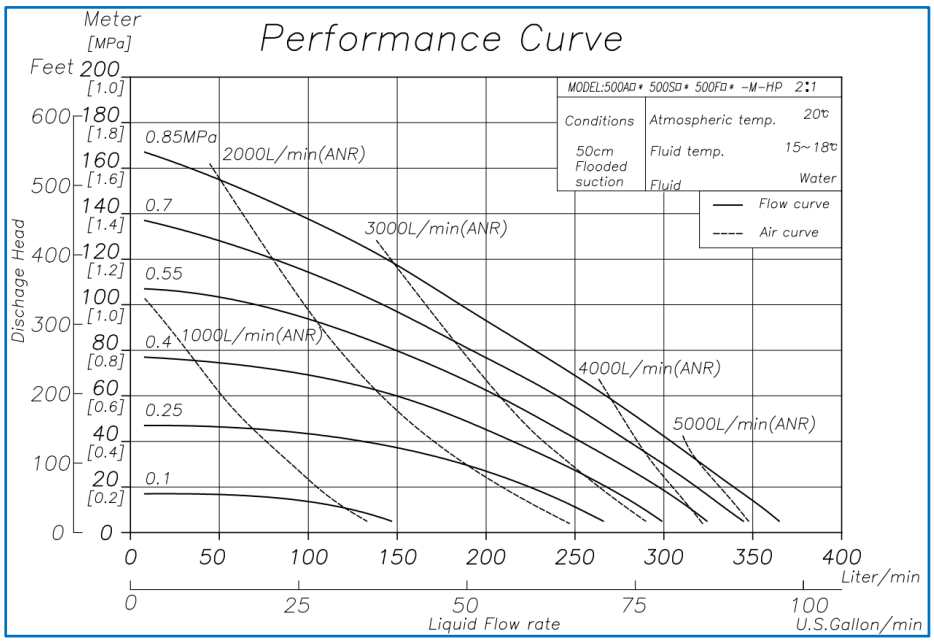

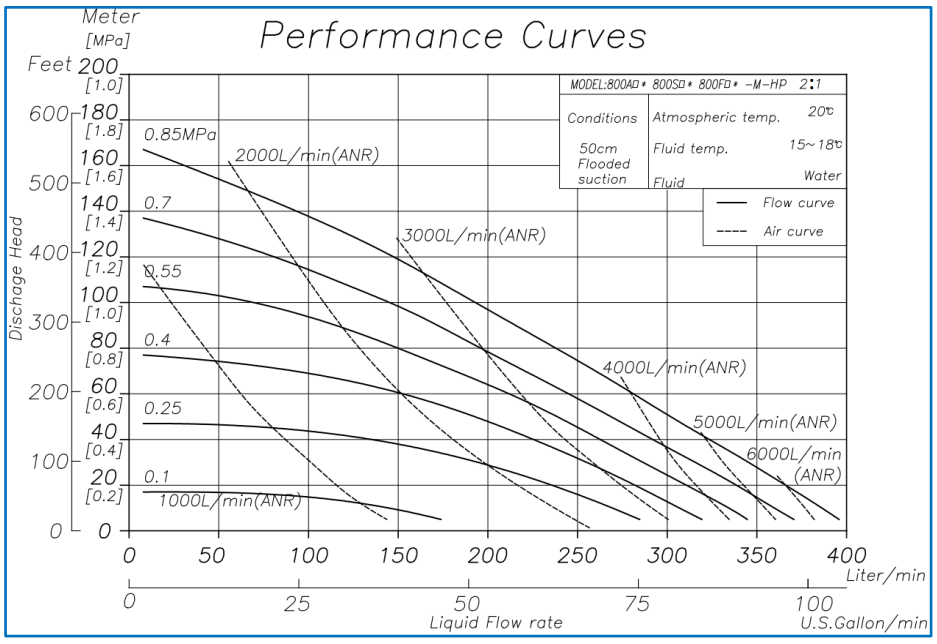

2:1 HP: High Pressure Pumps.

Utilizing a Simplex design where pressure output is roughly doubled & flow rate is roughly halved. High discharge pressures are achieved by utilizing twice the surface area (Air pressure driving both diaphragms) to double the liquid discharge pressure output.

All Simplex type HP Pumps are fitted with a adjustable back flow valve to limit over stroking (buffering) of the diaphragm on the return stroke. This generally improves the life expectancy of the diaphragms & other internal components on the pump.

Dimensional Drawings

400A□J-M・S□J-M・F□J-M

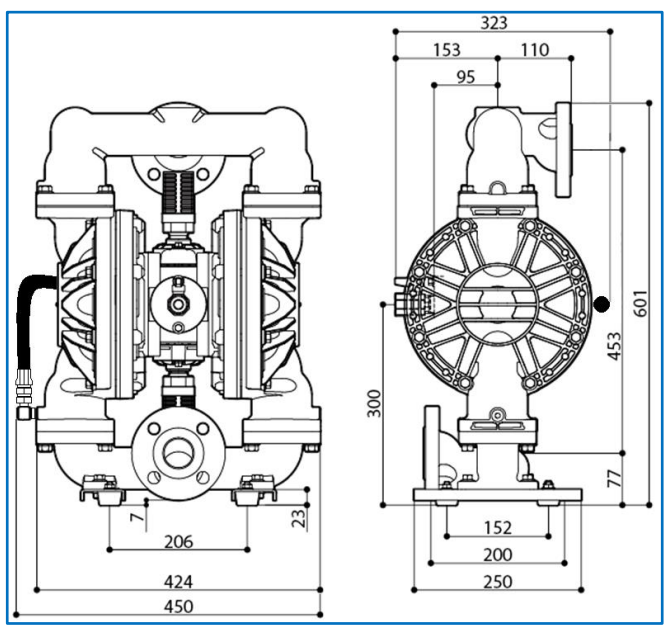

500A□J-M・S□J-M・F□J-M

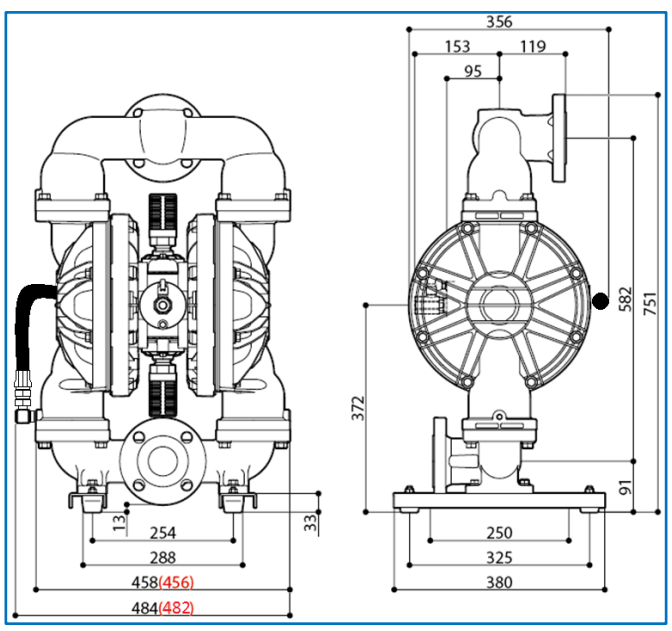

800A□J-M・S□J-M・F□J-M

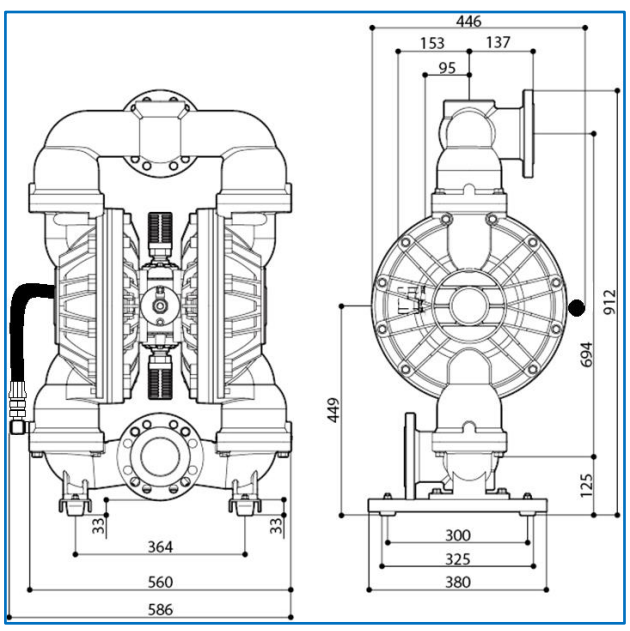

AODD Pump Capabilities

Self Priming	Variable Discharge Pressures	Inherently Safe Design
Run Dry	Transfer Liquid Slurries	Portable & Easy to Use
Run up to Dead Head	Transfer Large Sized Solids	Transfer Viscous Fluids
Variable Flow Rates	Handle Abrasives	Frequent Start Stop Operation
Shear Sensitivity	Transfer Chemicals	Powered by Compressed Air

CE LoopedC

Ex II2G ExhIIBT5Gb「0°C<Ta<70°C」
II2D ExhIIIBT100°CDb「0°C<Ta<70°C」

For more information about TC-X Pumps please contact: sales@iwaki.de
WWW.IWAKI.DE

JQA-QMA14279

091