# Air Operated Double Diaphragm Pumps

IWAKI AIR EUROPE

# TC-X400-M Plastic

## 1 ½" Heavy Duty Plastic Diaphragm Pump Data Sheet

Mechanical HD Spool

**Max. Flow Rate:** 390 l/min (Rubber)
**Liquid Connections:** DN40 Flanged Centre Ports
**Max. Slurry Size:** 7.0 mm
**Max. Suction Lift:** PTFE Dry: 2.0 m Rubber Dry: 5.0 m Wet (Primed): 8.0 m
**Max. Discharge Pressure:** 0.7 MPa
**Check Valve Configuration:** Ball Valves
**Pump Wetted Material Options:** PPG, CFPVDF, CFPP
**Diaphragm Options:** PTFE-EPDM "W", PTFE, CR, NBR, TPEE, TPO, EPDM, FKM
**Air Motor Material:** Aluminium (optional PTFE coated)
**Description:** Heavy Duty 1 ½" Plastic AODD Pumps available in PPG, CFPVDF & CFPP, Mechanical Coil Spring Air Spool, Aluminium Air Motor, Flanged Centre Port Connections, Ball Check Valves, Large Range of Standard & Special Diaphragm Options, External Plastic Silencer (x2), SUS Steel Base



**TC-X400G□J-M**
1½" PPG Pump
DN40 Flanged, 390 l/min

## 400 HD Plastic Pump Specifications

| Pump Model / Material | G□J-M V□J-M C□J-M | GTJ-M/GWJ-M VTJ-M/VWJ-M CTJ-M/CWJ-M |
|---|---|---|
| Max. Flow Rate | 390 l/min [103.0 GPM] | 360 l/min [95.1 GPM] |
| Max. Solids Size | 7.0 mm | |
| Max. Discharge Pressure | 0.7 MPa [100 psi] | |
| Supply Air Pressure Range | 0.1 - 0.7 MPa [14 - 100 psi] | 0.15 - 0.7 MPa [22 - 100 psi] |
| Max. Suction Lift | PTFE Dry: 2.0 m Rubber Dry: 5.0 m Wet (Primed): 8.0 m | |
| Max. Air Consumption | 2800 l/min (ANR) [98.8 SCFM] | 3500 l/min (ANR) [123.5 SCFM] |
| Max. Discharge Volume Per Cycle | 2800 ml | 1400 ml |
| Ambient Temperature Range | 0 - 70°C [32 - 158°F] | |
| Liquid Temperature Range | 0 - 60°C [32 - 140°F] | |
| Connections: Manifolds / Air | DN40 Flanged Centre Ports / ¾" Air ball valve | |

***Note:*** *Factors affecting a pumps stated liquid flow rate, suction lift & solids handling capabilities include, but are not limited to; pump size, diaphragm, ball valve & ball seat, type & materials of construction, air inlet pressure & air flow capability, liquid viscosity, specific gravity, slurry content, ambient & liquid temperature, liquid inlet & liquid outlet width, piping type, piping length & overall piping configuration. A minimum supply air pressure of 14psi (0.1 MPa) is required to operate the pump.*

## Pump Performance Curves

### Rubber Diaphragm Curves

400G□J-M 400V□J-M 400C□J-M

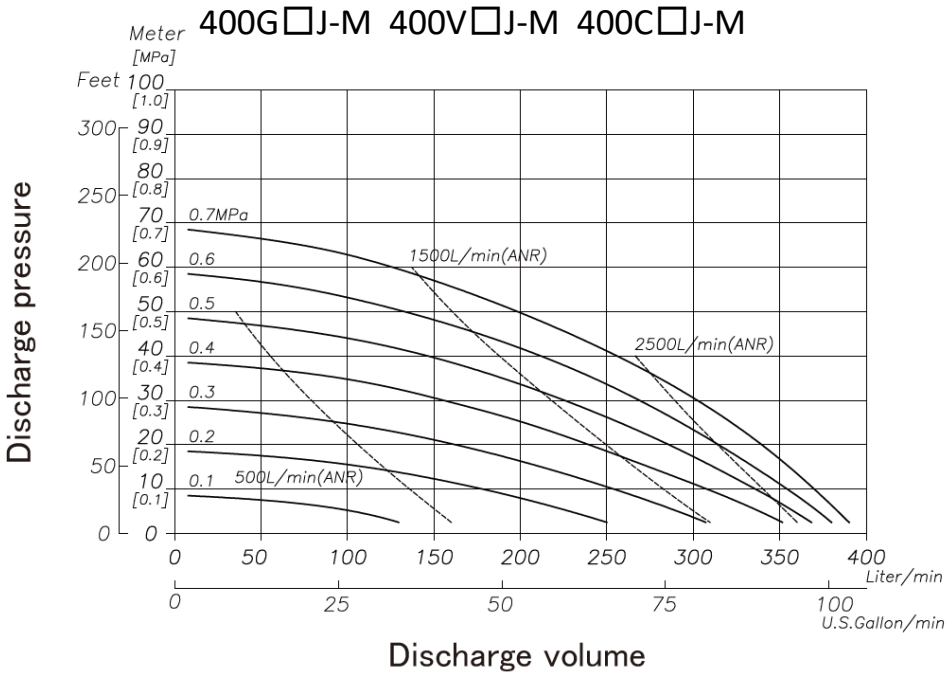


### PTFE Diaphragm Curves

400GTJ-M 400VTJ-M 400CTJ-M
400GWJ-M 400VWJ-M 400CWJ-M

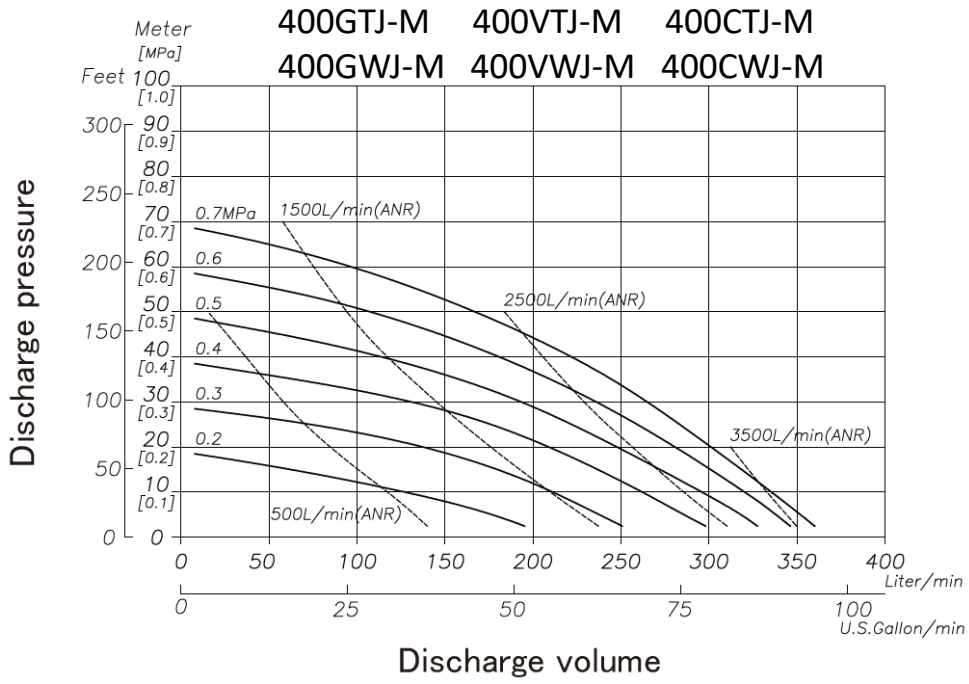


***For more information about TC-X Pumps please contact:*** sales@iwaki.de
***WWW.IWAKI.DE***

# Air Operated Double Diaphragm Pumps

IWAKI AIR EUROPE

## Wetted Materials Of Construction

| MODEL | 400GCJ-M | 400GNJ-M | 400GEJ-M | 400GVJ-M | 400GTJ-M | 400GHJ-M | 400GSJ-M | 400GWJ-M | 400VEJ-M | 400VVJ-M | 400VTJ-M | 400VSJ-M | 400VWJ-M |
|---|---|---|---|---|---|---|---|---|---|---|---|---|---|
| Pump Wetted Parts | PPG | | | | | | | | CFPVDF | | | | |
| Diaphragm | CR | NBR | EPDM | FKM | PTFE | TPEE | TPO | PTFE-EPDM | EPDM | FKM | PTFE | TPO | PTFE-EPDM |
| Ball Valve | CR | NBR | EPDM | FKM | PTFE | NBR | EPDM | PTFE | EPDM | FKM | PTFE | EPDM | PTFE |
| Valve Seat | PP | | | | | | | | PTFE | | | | |
| Center Disk | PPG | | | | | | | | PVDF | | | | |
| Weight | 28.5 kg (62.8 lbs) | | | | | | | | 32.5 kg (71.6 lbs) | | | | |

| MODEL | 400CCJ-M | 400CNJ-M | 400CEJ-M | 400CVJ-M | 400CTJ-M | 400CHJ-M | 400CSJ-M | 400CWJ-M |
|---|---|---|---|---|---|---|---|---|
| Pump Wetted Parts | CFPP | | | | | | | |
| Diaphragm | CR | NBR | EPDM | FKM | PTFE | TPEE | TPO | PTFE-EPDM |
| Ball Valve | CR | NBR | EPDM | FKM | PTFE | NBR | EPDM | PTFE |
| Valve Seat | CFPP | | | | | | | |
| Center Disk | CFPP | | | | | | | |
| Weight | 28.5 kg (62.8 lbs) | | | | | | | |

## Dimensional Drawings

### 400G□J-M, C□J-M, V□J-M

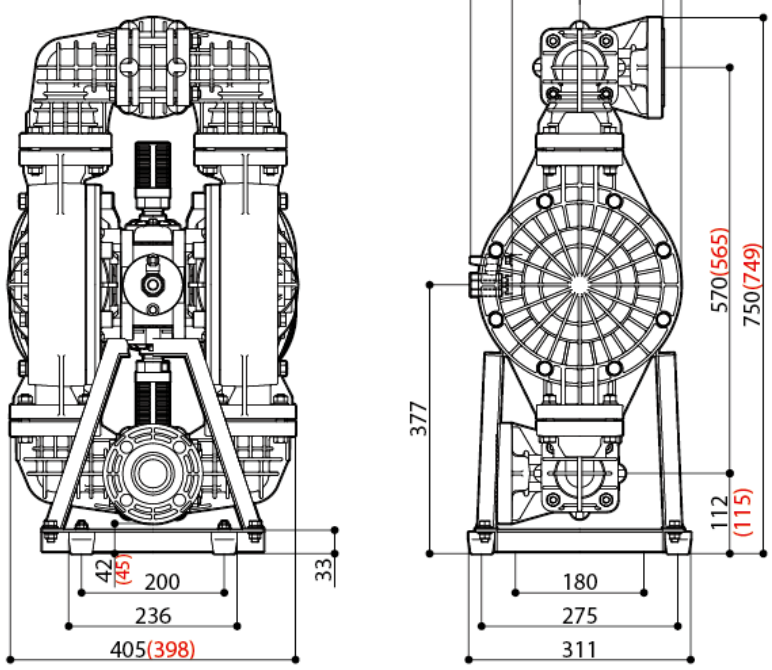




***TC-X400V□J-M / TC-X400C□J-M***

*1 ½" CFPVDF / CFPP Pump*
*DN40 Flanged, 390 l/min*

## Nomenclature

Series: TC-X | 400 | G | T | J | - | M | X — Special Options

- 400: Pump Connection Size, 400 (1 ½")
- G: Pump Body Material (Wetted)
  - G : PPG
  - V : CFPVDF
  - C : CFPP
- T: Diaphragm Material
  - W: PTFE-EPDM
  - T : PTFE
  - C : CR
  - N : NBR
  - H : TPEE
  - S : TPO
  - E : EPDM
  - V : FKM
- J: Connection Type
  - J: JIS/DIN Flange
  - A: ANSI Flange
- M: Mechanical actuated Air Motor
- X: Special Options

## AODD Pump Capabilities

| | | |
|---|---|---|
| Self Priming | Variable Discharge Pressures | Inherently Safe Design |
| Run Dry | Transfer Liquid Slurries | Portable & Easy to Use |
| Run up to Dead Head | Transfer Large Sized Solids | Transfer Viscous Fluids |
| Variable Flow Rates | Handle Abrasives | Frequent Start Stop Operation |
| Shear Sensitivity | Transfer Chemicals | Powered by Compressed Air |

CE LoopedC

Ex II2G ExhIIBT5Gb「0°C<Ta<70°C」
II2D ExhIIIBT100°CDb「0°C<Ta<70°C」

***For more information about TC-X Pumps please contact:*** sales@iwaki.de
***WWW.IWAKI.DE***



JQA-QMA14279

091