TC-X400 Metallic

1 ½” Metallic Diaphragm Pump Data Sheet

Max. Flow Rate: 600 l/min (Rubber Fitted)
Liquid Connections: Dual connection 1½” Rc Female & Flanged Centre Ports
Max. Slurry Size: 8.0 mm
Max. Suction Lift: PTFE Dry: 3.0 m Rubber Dry: 5.5 m Wet (Primed): 8.0 m
Max. Discharge Pressure: 0.85 MPa (Rubber)
Check Valve Configuration: Ball Valves
Pump Wetted Material Options: Aluminium, Stainless Steel, Cast Iron
Diaphragm Options: PTFE-EPDM “W”, PTFE, CR, NBR, TPEE, TPO, EPDM & FKM
Air Motor Material: Aluminium (optional PTFE coated)
Description: 1½” Metallic AODD Pumps available in Al, SUS, FC, Looped C-Spring Air Spool, Aluminium Air Motor, Dual Connection Threaded Flanged Centre Ports, Ball Check Valves, External Plastic Silencer



TC-X400S□J
1 ½” SUS Pump 600 l/min.

400 Metallic Pump Specifications		
Pump Model / Material	**A□J S□J F□J**	**ATJ/AWJ STJ/SWJ FTJ/FWJ**
Max. Flow Rate	600 l/min [158.5 GPM]	460 l/min [121.5 GPM]
Max. Solids Size	8.0 mm or less	
Max. Discharge Pressure	0.85 MPa [125 psi]	0.7 MPa [100 psi]
Supply Air Pressure Range	0.2 - 0.85 MPa [30 - 125 psi]	0.2 – 0.7 MPa [30 - 100 psi]
Max. Suction Lift	PTFE Dry: 3.0 m Rubber Dry: 5.5 m Wet (Primed): 8.0 m	
Max. Air Consumption	5000 l/min (ANR) [176.5 SCFM]	4200 l/min (ANR) [148.3 SCFM]
Max. Discharge Volume Per Cycle	2800 ml	1400 ml
Ambient Temperature Range	0 - 70°C [32 - 158°F]	
Liquid Temperature Range	NBR/CR 0-70°C [32-158°F] TPEE/EPDM 0-80°C [32-176°F] FKM/TPO/PTFE 0-100°C [32-212°F]*	
Connections: Manifolds / Air	1 ½” Rc Female Threaded DN40/ANSI Flanged Centre Ports / ¾”Rc Air ball valve	

*Operating in the condition a fluid temperature is at 70°C or above might cause an early degradation of performance and required to change the material of air motor seal parts. Please contact your nearest distributor for details.

Note: *Factors affecting a pumps stated liquid flow rate, suction lift & solids handling capabilities include, but are not limited to; pump size, diaphragm, ball valve & ball seat, type & materials of construction, air inlet pressure & air flow capability, liquid viscosity, specific gravity, slurry content, ambient & liquid temperature, liquid inlet & liquid outlet width, piping type, piping length & overall piping configuration. A minimum supply air pressure of 30 PSI (0.2 MPa) is required to operate the pump.*

Pump Performance Curves

Rubber Diaphragm Curves

400A□J 400S□J 400F□J

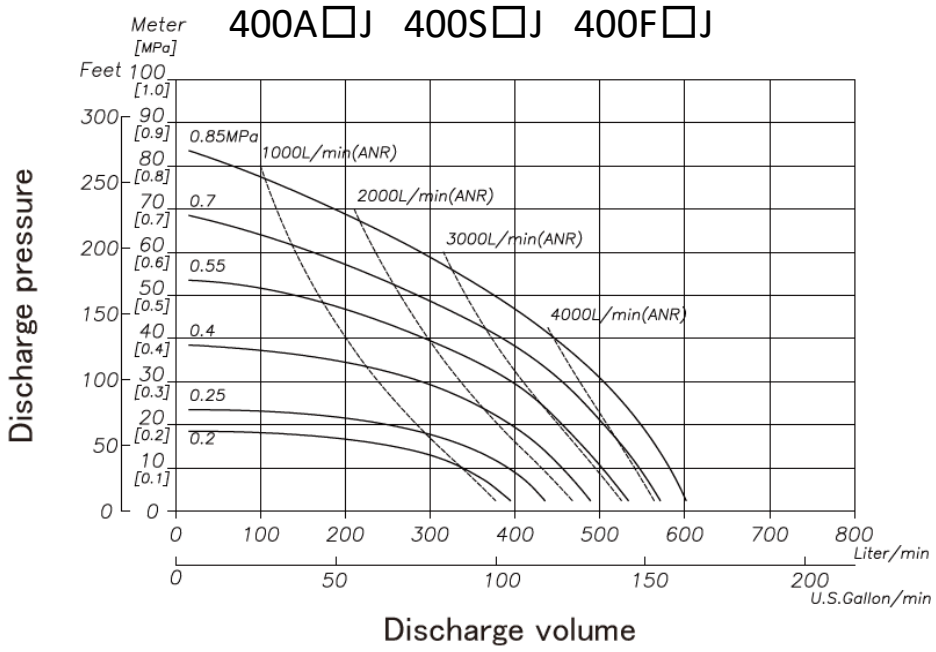

PTFE Diaphragm Curves

400ATJ/AWJ 400STJ/SWJ 400FTJ/FWJ

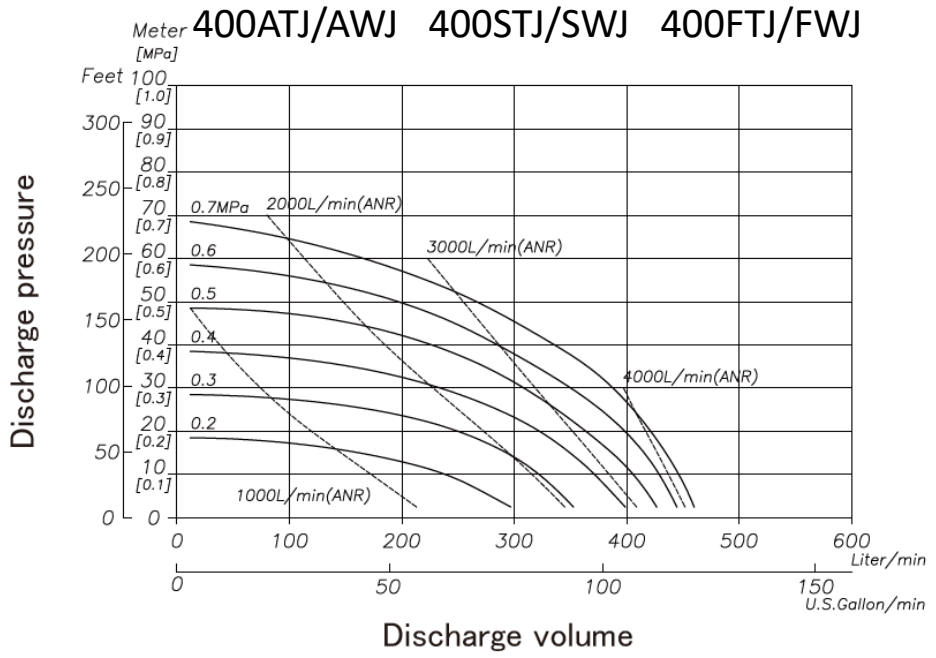

For more information about TC-X Pumps please contact: sales@iwaki.de

Air Operated Double Diaphragm Pumps

IWAKI AIR EUROPE

Wetted Materials Of Construction

MODEL	400ACJ	400ANJ	400AEJ	400AVJ	400ATJ	400AHJ	400ASJ	400AWJ	400SCJ	400SNJ	400SEJ	400SVJ	400STJ	400SHJ	400SSJ	400SWJ
Pump Wetted Parts	ADC12 * AC4C								SCS14							
Diaphragm	CR	NBR	EPDM	FKM	PTFE	TPEE	TPO	PTFE-EPDM	CR	NBR	EPDM	FKM	PTFE	TPEE	TPO	PTFE-EPDM
Ball Valve	CR	NBR	EPDM	FKM	PTFE	NBR	EPDM	PTFE	CR	NBR	EPDM	FKM	PTFE	NBR	EPDM	PTFE
Valve Seat	CR	NBR	EPDM	FKM	PTFE	NBR	EPDM	PTFE	CR	NBR	EPDM	FKM	PTFE	NBR	EPDM	PTFE
Center Disk	A5056								SUS316							
Weight	30.0 kg [66.2 lbs]								55.0 kg [121.3 lbs)]							

MODEL	400FCJ	400FNJ	400FEJ	400FVJ	400FTJ	400FHJ	400FSJ	400AWJ
Pump Wetted Parts	S45C							
Diaphragm	CR	NBR	EPDM	FKM	PTFE	TPEE	TPO	PTFE-EPDM
Ball Valve	CR	NBR	EPDM	FKM	PTFE	NBR	EPDM	PTFE
Valve Seat	CR	NBR	EPDM	FKM	PTFE	NBR	EPDM	PTFE
Center Disk	SS400							
Weight	55.0 kg [121.3 lbs)]							

Dimensional Drawings

400 A□J S□J F□J

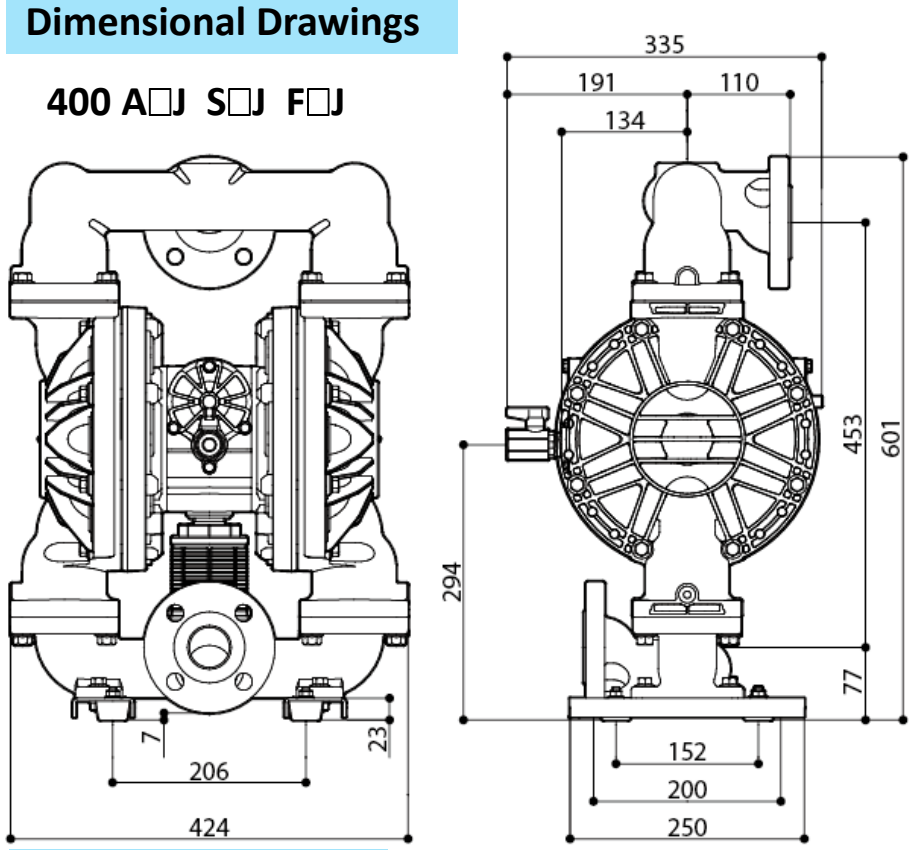



TC-X400A□J

1 ½” Aluminium *Pump*
600l/min



TC-X400F□J

1 ½” Cast Iron Pump
600l/min



Nomenclature

Series -- TC-X | 400 | A | W | J | - | X ----- Special Options

- 400: Pump Connection Size 400 (1 ½”)
- A: Pump Body Material (Wetted)
  - A: Al
  - S: SUS
  - F: Cast Iron
- W: Diaphragm Material
  - W: PTFE-EPDM
  - T: PTFE
  - C: CR
  - N: NBR
  - H: TPEE
  - S: TPO
  - E: EPDM
- J: Connection Type Equivalent to:
  - J: JIS/Din/ANSI Flange with internal Rc thread
  - A: JIS/Din/ANSI Flange with internal NPT thread

AODD Pump Capabilities

- Self Priming
- Run Dry
- Run up to Dead Head
- Variable Flow Rates
- Shear Sensitivity
- Variable Discharge Pressures
- Transfer Liquid Slurries
- Transfer Large Sized Solids
- Handle Abrasives
- Transfer Chemicals
- Inherently Safe Design
- Portable & Easy to Use
- Transfer Viscous Fluids
- Frequent Start Stop Operation
- Powered by Compressed Air

CE LoopedC

Ex II2G ExhIIBT5Gb「0°C<Ta<70°C」
II2D ExhIIIBT100°CDb「0°C<Ta<70°C」

For more information about TC-X Pumps please contact: sales@iwaki.de

JQA-QMA14279

091