Air Operated Double Diaphragm Pumps

IWAKI AIR EUROPE

TC-X400 Plastic

1 ½” Plastic Diaphragm Pump Data Sheet

Max. Flow Rate: 400 l/min (Rubber)
Liquid Connections: DN40 Flanged Centre Ports
Max. Slurry Size: 7.0mm
Max. Suction Lift: PTFE Dry: 2.0 m Rubber Dry: 5.0 m Wet (Primed): 8.0 m
Max. Discharge Pressure: 0.7 MPa
Check Valve Configuration: Ball Valves
Pump Wetted Material Options: PPG, CFPVDF, CFPP
Diaphragm Options: PTFE-EPDM “W”, PTFE, CR, NBR, TPEE, TPO, EPDM, FKM
Air Motor Material: Aluminium (optional PTFE coated)
Description: 1½” Plastic AODD Pumps available in PPG, CFPVDF & CFPP. Looped C-Spring Air Spool, Aluminium Air Motor, Flanged Centre Port Connections, Ball Check Valves, SUS Base, External Plastic Silencer



TC-X400V□J / TC-X400C□J
1½” CFPVDF / CFPP Pump Flanged
400 l/min

400 Plastic Pump Specifications		
Pump Model / Material	**G□J V□J C□J**	**GTJ/GWJ VTJ/VWJ CTJ/CWJ**
Max. Flow Rate	400 l/min [105.7 GPM]	380 l/min [100.4 GPM]
Max. Solids Size	7.0 mm or less	
Max. Discharge Pressure	0.7 MPa [100 PSI]	
Supply Air Pressure Range	0.2 - 0.7 MPa [30 - 100 PSI]	
Max. Suction Lift	PTFE Dry: 2.0 m Rubber Dry: 5.0 m Wet (Primed): 8.0 m	
Max. Air Consumption	3000 l/min (ANR) [105.9 SCFM]	4000 l/min (ANR) [141.2 SCFM]
Max. Discharge Volume Per Cycle	2800 ml	1400 ml
Ambient Temperature Range	0 - 70°C [32 - 158°F]	
Liquid Temperature Range	0 - 60°C [32 - 140°F]	
Connections: Manifolds / Air	DN40 Flanged Centre Ports / ¾” Rc Ball valve	

Note: *Factors affecting a pumps stated liquid flow rate, suction lift & solids handling capabilities include, but are not limited to; pump size, diaphragm, ball valve & ball seat, type & materials of construction, air inlet pressure & air flow capability, liquid viscosity, specific gravity, slurry content, ambient & liquid temperature, liquid inlet & liquid outlet width, piping type, piping length & overall piping configuration. A minimum supply air pressure of 30 PSI (0.2 MPa) is required to operate the pump.*

Pump Performance Curves

Rubber Diaphragm Curves

400G□J 400V□J 400C□J

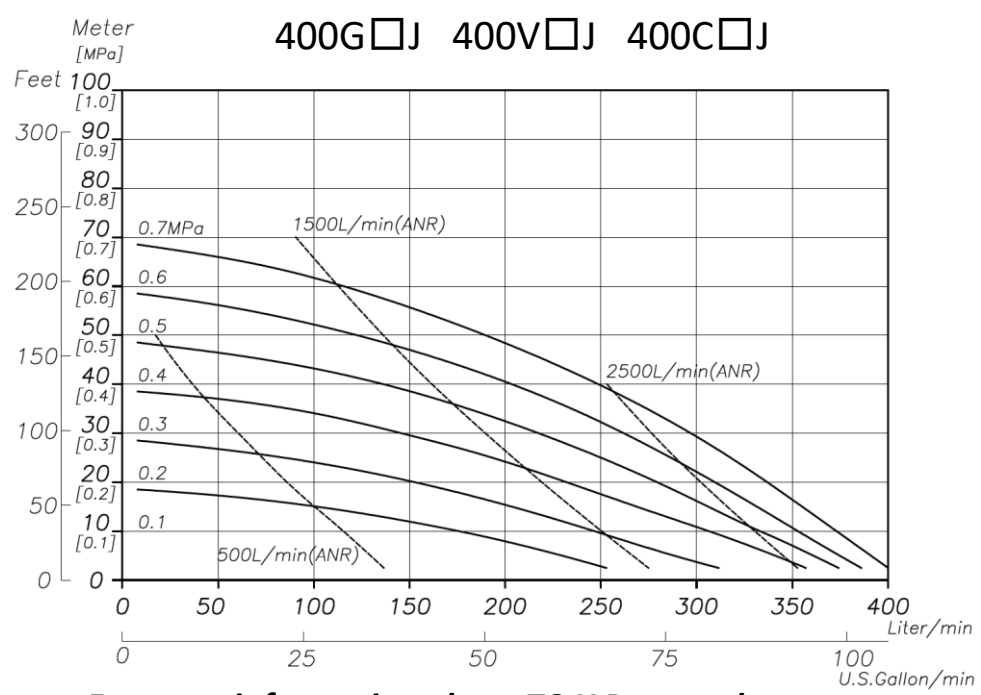

PTFE Diaphragm Curves

400GTJ/GWJ 400VTJ/VWJ 400CTJ/CWJ

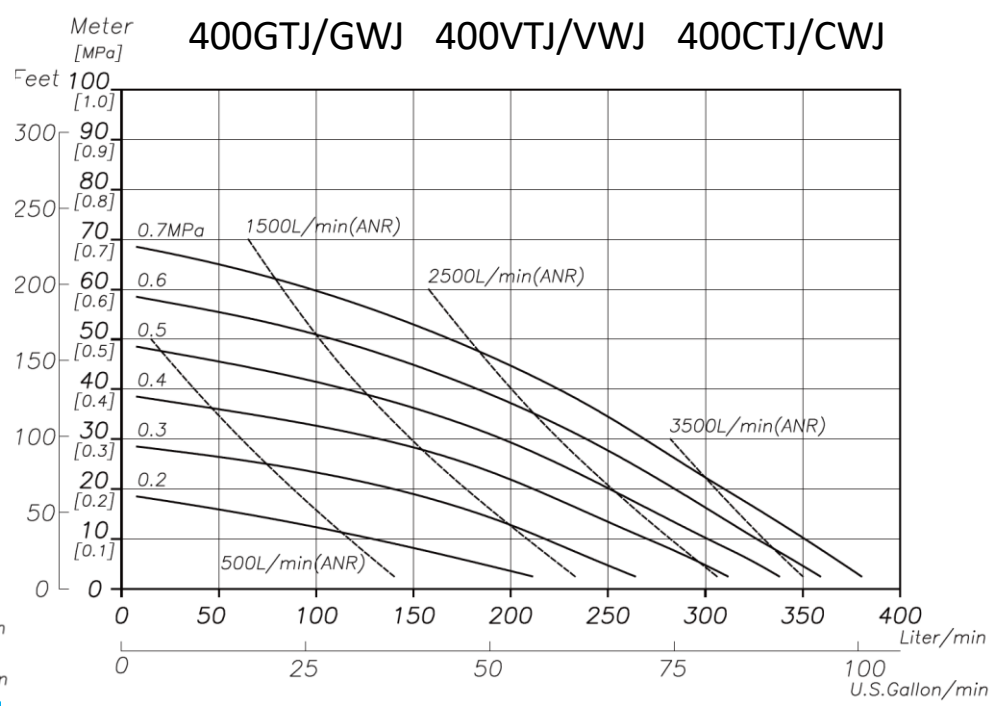

For more information about TC-X Pumps please contact: sales@iwaki.de

Air Operated Double Diaphragm Pumps

IWAKI AIR EUROPE

Wetted Materials Of Construction

MODEL	400GCJ	400GNJ	400GEJ	400GVJ	400GTJ	400GHJ	400GSJ	400GWJ	400VEJ	400VVJ	400VTJ	400VSJ	400VWJ
Pump Wetted Parts	PPG								PVDF				
Diaphragm	CR	NBR	EPDM	FKM	PTFE	TPEE	TPO	PTFE-EPDM	EPDM	FKM	PTFE	TPO	PTFE-EPDM
Ball Valve	CR	NBR	EPDM	FKM	PTFE	NBR	EPDM	PTFE	EPDM	FKM	PTFE	EPDM	PTFE
Valve Seat	PP								PTFE				
Center Disk	PPG								PVDF				
Weight	29.0 kg [63.9 lbs]								32.5 kg [71.7 lbs]				

MODEL	400CCJ	400CNJ	400CEJ	400CVJ	400CTJ	400CHJ	400CSJ	400CWJ
Pump Wetted Parts	CFPP							
Diaphragm	CR	NBR	EPDM	FKM	PTFE	TPEE	TPO	PTFE-EPDM
Ball Valve	CR	NBR	EPDM	FKM	PTFE	NBR	EPDM	PTFE
Valve Seat	CFPP							
Center Disk	CFPP							
Weight	29.0 kg [63.9 lbs]							

Dimensional Drawings

400G□J・C□J・V□J

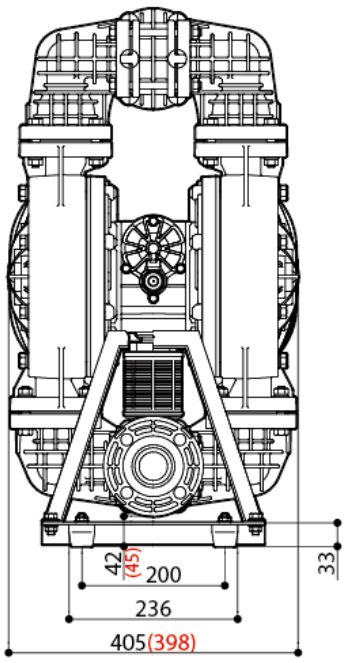

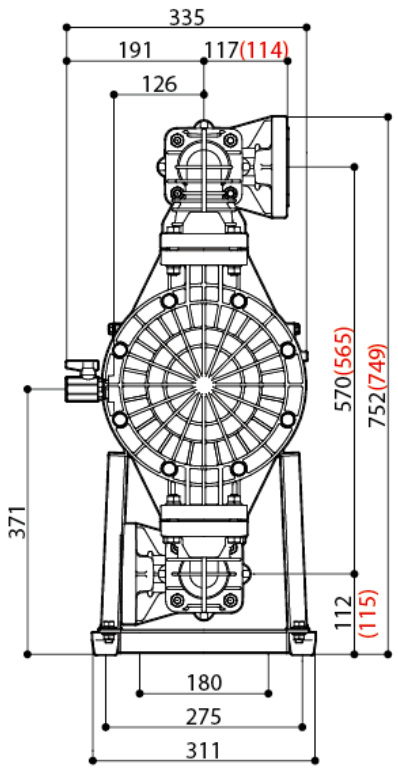



TC-X400G□J

DN40 PPG Pump Flanged
400l/min

Nomenclature

Series TC-X | 400 | G | W | J | - | X — Special Options

- 400: Pump Connection Size 400 (1 ½”)
- G: Pump Body Material (Wetted)
  - G : PPG
  - V : CFPVDF
  - C : CFPP
- W: Diaphragm Material
  - W: PTFE-EPDM
  - T : PTFE
  - C : CR
  - N : NBR
  - H : TPEE
  - S : TPO
  - E : EPDM
  - V : FKM
- J: Connection Type
  - J: JIS/DN Flange
  - A: ANSI Flange

AODD Pump Capabilities

- Self Priming
- Run Dry
- Run up to Dead Head
- Variable Flow Rates
- Shear Sensitivity
- Variable Discharge Pressures
- Transfer Liquid Slurries
- Transfer Large Sized Solids
- Handle Abrasives
- Transfer Chemicals
- Inherently Safe Design
- Portable & Easy to Use
- Transfer Viscous Fluids
- Frequent Start Stop Operation
- Powered by Compressed Air

CE LoopedC

Ex II2G ExhIIBT5Gb「0°C<Ta<70°C」
II2D ExhIIIBT100°CDb「0°C<Ta<70°C」

JQA-QMA14279

UKAS MANAGEMENT SYSTEMS 091

For more information about TC-X Pumps please contact: sales@iwaki.de