Air Operated Double Diaphragm Pumps

IWAKI AIR EUROPE

TC-X400HT

1” High Purity Virgin PTFE Pumps Data Sheet

LoopedC

Max. Flow Rate: 95 l/min
Max. Slurry Size: 3 mm (Flat 0 mm)
Liquid Connection Size: 1”
Liquid Connection Configuration: Flanged Side Ports / (Female Threaded)
Pump Wetted Material Options: High Purity PTFE / PFA (Clean Room)
Air Motor Material: HDPE (High Density Polyethylene)
Diaphragm Options: PTFE
Check Valve Configuration: Ball/Flat Check Valves
Air Motor Model: Looped C-Spring Air Spool
Exhaust Configuration: External Air Exhaust Silencer
Torque Reinforcement Plates: PVC
Base & Footprint: PVC Base Plate & Rubber Feet



TC-X400HTJ
1” High Purity PTFE Pump
95 l/min Max

Standard 250HT Pump Specifications

Pump Model	TC-X400HTJ	TC-X400HTJ-FV
Max. Flow Rate	95 l/min [16.9 GPM]	
Max. Discharge Vol. Per Cycle	700 ml	
Max. Solids Size	3.0 mm	0 mm
Supply Air Pressure Range	0.2 – 0.7 MPa [30 - 100 psi]	
Max. Discharge Pressure	0.7 MPa [100 psi]	
Max. Air Consumption	1300 l/min (ANR) [26.50 SCFM]	
Max. Suction Lift	Dry: 2.0 m Wet (Primed): 8.0 m	Dry: 3.0 m Wet (Primed): 8.0 m
Manifold / Air Connections	1” Flanged Side Ports / ⅜” Rc Ball valve	1” Flanged Side Ports / ⅜” Rc Ball valve
Check Valve Configuration	Ball Type Check Valves	Flat Type Check Valves
Wetted Body Material	High Purity PTFE (Polytetrafluoroethylene)	
Diaphragm Material	High Purity PTFE (Polytetrafluoroethylene)	
Flat Valve, Seat & Guide Material	High Purity PTFE (Polytetrafluoroethylene)	
Wetted Centre Discs Material	High Purity PFA encapsulated SUS316 (Perfluoroalkoxy Alkane)	
Liquid Seals Material	High Purity PTFE (Polytetrafluoroethylene)	
Ambient Temp. Range	0 - 70°C [32 - 158°F]	
Liquid Temp. Range	0 - 80°C [32 - 176°F]	
Max. Noise Level	90 dB (ISO 1996 A weighted Sound Pressure)	
Net Weight	52.0 kg [115 lbs]	

Operation Note: *Factors affecting a pumps stated liquid flow rate, suction lift & solids handling capabilities include, but are not limited to; pump size, diaphragm, ball valve & ball seat, type & materials of construction, air inlet pressure & air flow capability, liquid viscosity, specific gravity, slurry content, ambient & liquid temperature, liquid inlet & liquid outlet width, piping type, piping length & overall piping configuration. A minimum supply air pressure is required to operate the pump.*

Pump Performance Curve

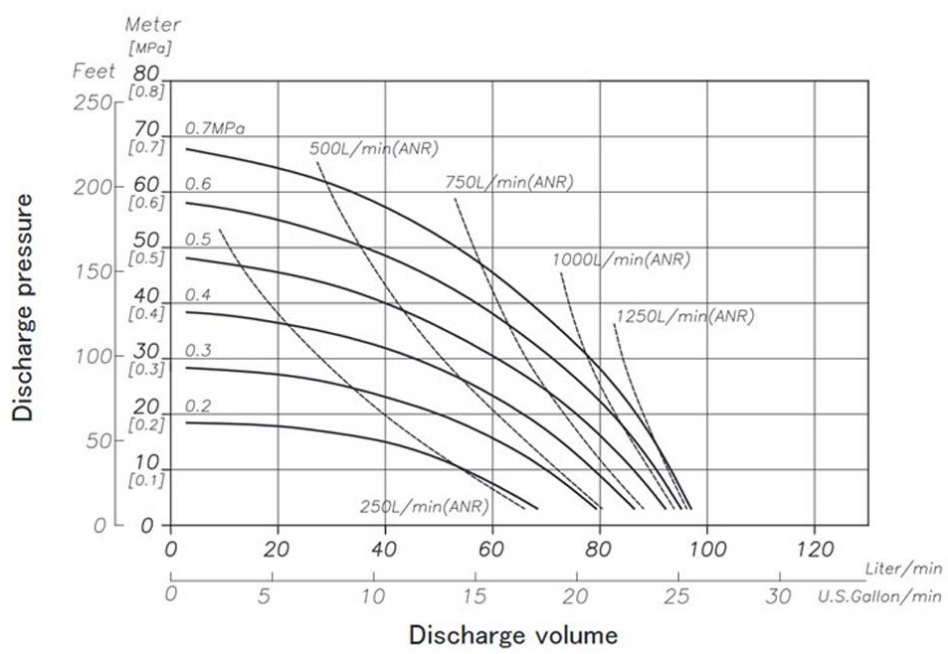

For more information about TC-X Pumps please contact: sales@iwaki.de
WWW.IWAKI.DE

Air Operated Double Diaphragm Pumps

IWAKI AIR EUROPE

Wetted Materials Of Construction

MODEL	400HT(J)
Pump Wetted Parts	PTFE/PFA
Diaphragm	PTFE
Valve Stopper	PTFE
Ball / Flat Valve	PTFE
Valve Seat	PTFE
Center Disk	PFA
Weight	52.0 kg (115 lbs)

Note: US FED STD 209E Cleanroom Standards Class 1000, equivalent to ISO6

Dimensional Drawings

TC-X400HTJ

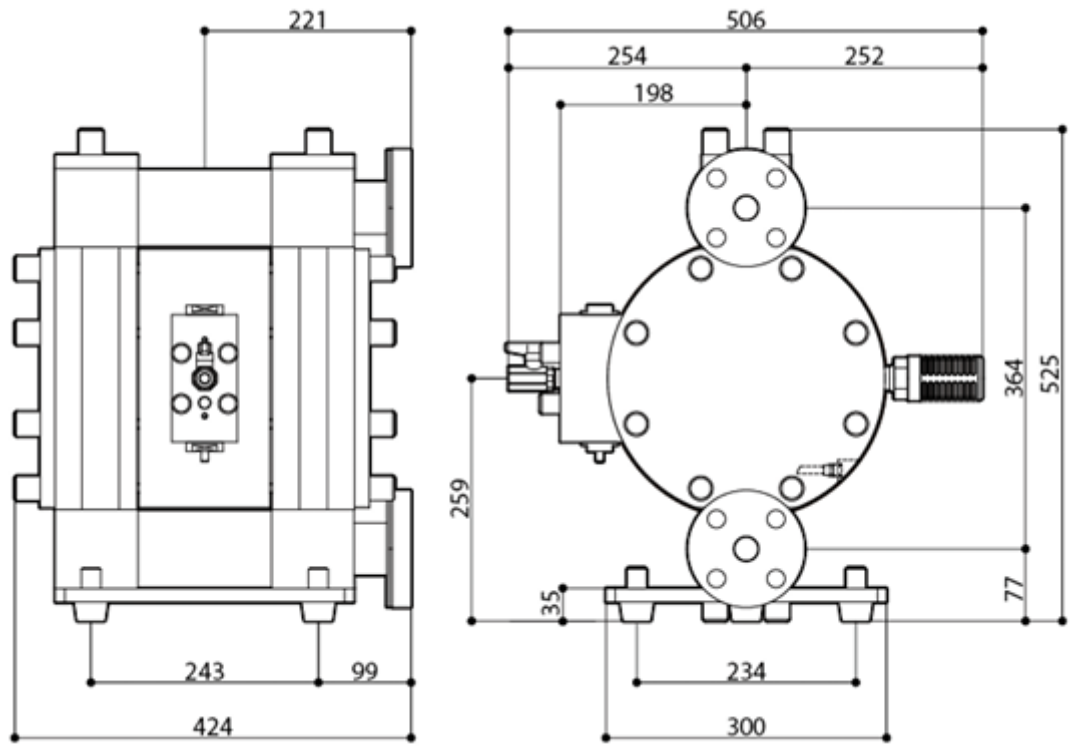

Nomenclature

Series — TC-X | 400 | H | T | J | - | X — Special Options

- 400: Pump Connection Size 400 (1”)
- H: Pump Body Material (Wetted) H: High Purity PTFE Clean Room Class 1000
- T: Diaphragm Material T: PTFE
- J: Connection Type
  - □: Rc
  - N : NPT
  - J : Jis/Din Flange
  - A : Ansi Flange

AODD Pump Capabilities

Self Priming	Variable Discharge Pressures	Inherently Safe Design
Run Dry	Transfer Liquid Slurries	Portable & Easy to Use
Run up to Dead Head	Transfer Large Sized Solids	Transfer Viscous Fluids
Variable Flow Rates	Handle Abrasives	Frequent Start Stop Operation
Shear Sensitivity	Transfer Chemicals	Powered by Compressed Air

CE LoopedC

Ex II2G ExhIIBT5Gb「0°C<Ta<70°C」
II2D ExhIIIBT100°CDb「0°C<Ta<70°C」

For more information about TC-X Pumps please contact: sales@iwaki.de
WWW.IWAKI.DE

JQA-QMA14279

091