Air Operated Double Diaphragm Pumps

IWAKI AIR EUROPE

TC-X500-M Plastic

2” Heavy Duty Plastic Diaphragm Pump Data Sheet

Mechanical HD Spool

Max. Flow Rate: 640 l/min (Rubber)
Liquid Connections: DN/ANSI Flanged Centre Ports
Max. Slurry Size: 8.0 mm
Max. Suction Lift: PTFE Dry: 2.0 m Rubber Dry: 5.0 m Wet (Primed): 8.0 m
Max. Discharge Pressure: 0.7 MPa
Check Valve Configuration: Ball Valves
Pump Wetted Material Options: PPG, CFPVDF, CFPP
Diaphragm Options: PTFE-EPDM “W”, PTFE, CR, NBR, TPEE, TPO, EPDM, FKM
Air Motor Material: Aluminium (optional PTFE coated)
Description: Heavy Duty 2” Plastic AODD Pumps available in PPG, CFPVDF & CFPP, Mechanical Coil Spring Air Spool, Aluminium Air Motor, Flanged Centre Port Connections, Ball Check Valves, Large Range of Standard & Special Diaphragm Options, External Plastic Silencer (x2), SUS Steel Base



TC-X500G□J-M
2” PPG Pump
DN50/ANSI Flanged, 640 l/min

500 HD Plastic Pump Specifications

Pump Model / Material	G□J-M V□J-M C□J-M	GTJ-M/GWJ-M VTJ-M/VWJ-M CTJ-M/CWJ-M
Max. Flow Rate	640 l/min [169.1 GPM]	520 l/min [137.4 GPM]
Max. Solids Size	8.0 mm	
Max. Discharge Pressure	0.7 MPa [100 psi]	
Supply Air Pressure Range	0.1 - 0.7 MPa [14 - 100 psi]	0.15 - 0.7 MPa [22 - 100 psi]
Max. Suction Lift	PTFE Dry: 2.0 m Rubber Dry: 5.0 m Wet (Primed): 8.0 m	
Max. Air Consumption	4100 l/min (ANR) [144.7 SCFM]	5000 l/min (ANR) [176.6 SCFM]
Max. Discharge Volume Per Cycle	3500 ml	2000 ml
Ambient Temperature Range	0 - 70°C [32 - 158°F]	
Liquid Temperature Range	0 - 60°C [32 - 140°F]	
Connections: Manifolds / Air	DN50/ANSI Flanged Centre Ports / ¾” Air ball valve	

Note: *Factors affecting a pumps stated liquid flow rate, suction lift & solids handling capabilities include, but are not limited to; pump size, diaphragm, ball valve & ball seat, type & materials of construction, air inlet pressure & air flow capability, liquid viscosity, specific gravity, slurry content, ambient & liquid temperature, liquid inlet & liquid outlet width, piping type, piping length & overall piping configuration. A minimum supply air pressure of 14psi (0.1 MPa) is required to operate the pump.*

Pump Performance Curves

Rubber Diaphragm Curves

500G□J-M 500V□J-M 500C□J-M

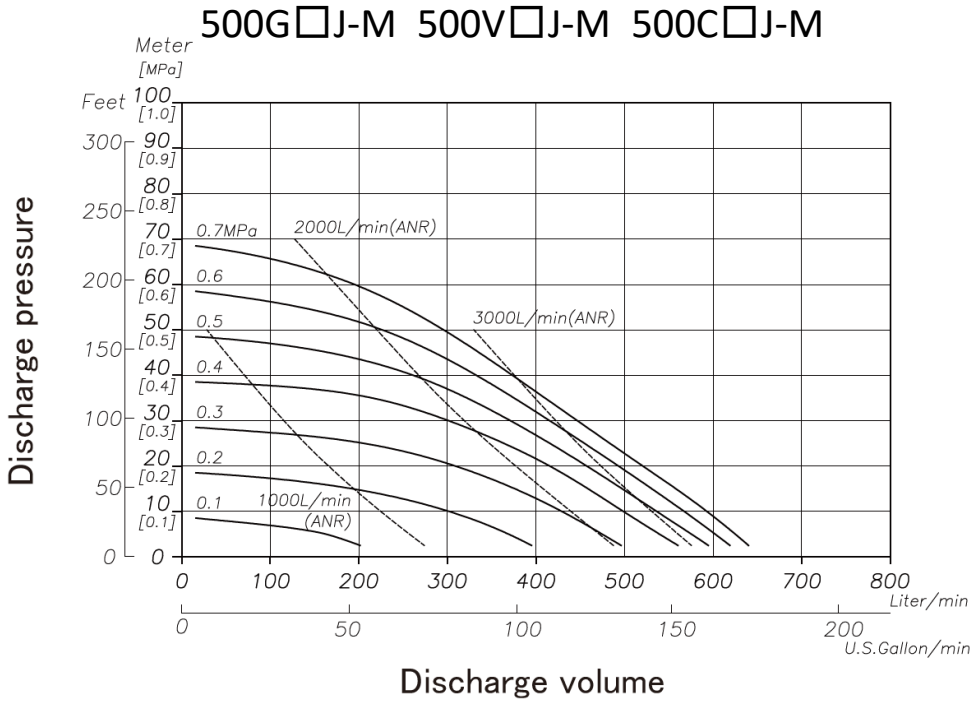

PTFE Diaphragm Curves

500GTJ-M 500VTJ-M 500CTJ-M
500GWJ-M 500VWJ-M 500CWJ-M

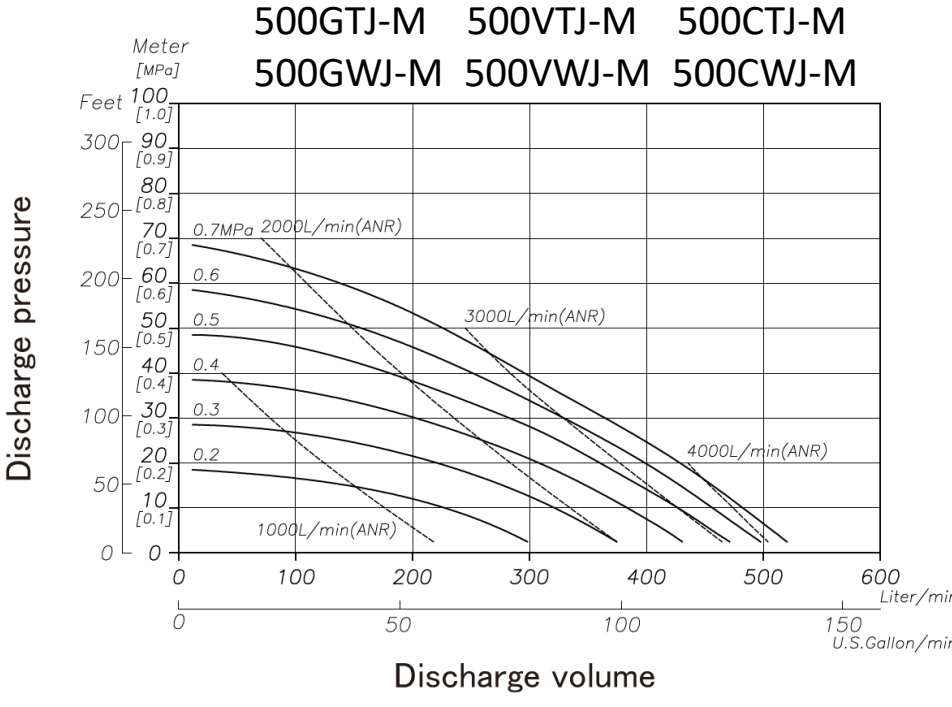

For more information about TC-X Pumps please contact: sales@iwaki.de
WWW.IWAKI.DE

Air Operated Double Diaphragm Pumps

IWAKI AIR EUROPE

Wetted Materials Of Construction

MODEL	500GCJ-M	500GNJ-M	500GEJ-M	500GVJ-M	500GTJ-M	500GHJ-M	500GSJ-M	500GWJ-M	500VEJ-M	500VVJ-M	500VTJ-M	500VSJ-M	500VWJ-M
Pump Wetted Parts	PPG								CFPVDF				
Diaphragm	CR	NBR	EPDM	FKM	PTFE	TPEE	TPO	PTFE-EPDM	EPDM	FKM	PTFE	TPO	PTFE-EPDM
Ball Valve	CR	NBR	EPDM	FKM	PTFE	NBR	EPDM	PTFE	EPDM	FKM	PTFE	EPDM	PTFE
Valve Seat	PP								PTFE				
Center Disk	PPG								PVDF				
Weight	38.0 kg (83.8 lbs)								45.0 kg (99.2 lbs)				

MODEL	500CCJ-M	500CNJ-M	500CEJ-M	500CVJ-M	500CTJ-M	500CHJ-M	500CSJ-M	500CWJ-M
Pump Wetted Parts	CFPP							
Diaphragm	CR	NBR	EPDM	FKM	PTFE	TPEE	TPO	PTFE-EPDM
Ball Valve	CR	NBR	EPDM	FKM	PTFE	NBR	EPDM	PTFE
Valve Seat	CFPP							
Center Disk	CFPP							
Weight	38.0 kg (83.8 lbs)							

Dimensional Drawings

500G□J-M, C□J-M, V□J-M

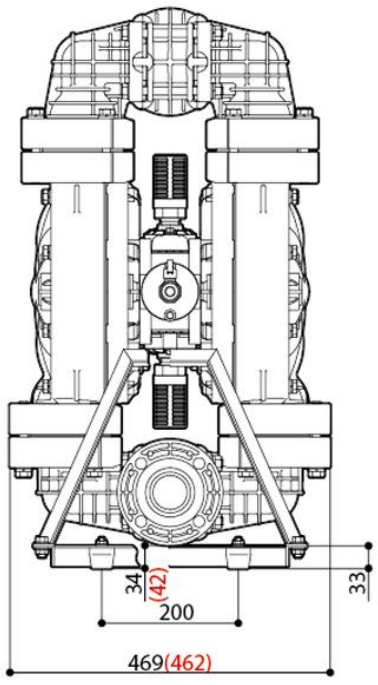

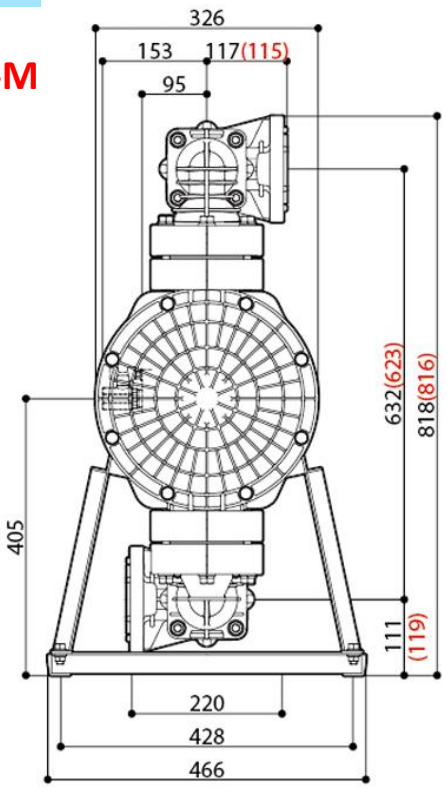



TC-X500V□J-M / TC-X500C□J-M

2” CFPVDF / CFPP Pump
DN50/ANSI Flanged, 640l/min

Nomenclature

Series: TC-X | 500 | G | T | J | - | M | X — Special Options

- 500: Pump Connection Size 500 (2”)
- G: Pump Body Material (Wetted)
  - G: PPG
  - V: CFPVDF
  - C: CFPP
- T: Diaphragm Material
  - W: PTFE-EPDM
  - T : PTFE
  - C : CR
  - N : NBR
  - H : TPEE
  - S : TPO
  - E : EPDM
  - V : FKM
- J: Connection Type
  - J: JIS/DIN/ANSI Flange
- M: Mechanical Air Motor

AODD Pump Capabilities

Self Priming	Variable Discharge Pressures	Inherently Safe Design
Run Dry	Transfer Liquid Slurries	Portable & Easy to Use
Run up to Dead Head	Transfer Large Sized Solids	Transfer Viscous Fluids
Variable Flow Rates	Handle Abrasives	Frequent Start Stop Operation
Shear Sensitivity	Transfer Chemicals	Powered by Compressed Air

CE LoopedC

Ex II2G ExhIIBT5Gb「0°C<Ta<70°C」
II2D ExhIIIBT100°CDb「0°C<Ta<70°C」

For more information about TC-X Pumps please contact: sales@iwaki.de
WWW.IWAKI.DE

JQA-QMA14279

091