Air Operated Double Diaphragm Pumps

IWAKI AIR EUROPE

TC-X500 Metallic

2” Metallic Diaphragm Pump Data Sheet

LoopedC

Max. Flow Rate: 800 l/min (Rubber)
Liquid Connection: Dual connection 2” Rc Female & Flanged Centre Ports
Max. Slurry Size: 8.0 mm
Max. Suction Lift: PTFE Dry: 3.0 m Rubber Dry: 5.5 m Wet (Primed): 8.0 m
Max. Discharge Pressure: 0.85 MPa (Rubber)
Check Valve Configuration: Ball Type Check Valves
Pump Wetted Material Options: Aluminium, Stainless Steel, Cast Iron
Diaphragm Options: PTFE-EPDM “W”, PTFE, CR, NBR, TPEE, TPO, EPDM, FKM
Air Motor Material: Aluminium (optional PTFE coated)
Description: 2” Metallic AODD Pumps available in Al, SUS, FC, Looped C-Spring Air Spool, Aluminium Air Motor, Dual Connection Threaded & Flanged Centre Ports, Ball Check Valves, External Plastic Silencer



TC-X500S□J
2” SUS Pump 780 l/min

500 Metallic Pump Specifications

Pump Model	A□J S□J F□J	ATJ/AWJ STJ/SWJ FTJ/FWJ
Max. Flow Rate	800 l/min [211.4 GPM]	600 l/min [158.5 GPM]
Max. Solids Size	8.0 mm	
Max. Discharge Pressure	0.85 MPa [125 psi]	0.7 MPa [100 psi]
Supply Air Pressure Range	0.2 - 0.85 MPa [29 - 125 psi]	0.2 - 0.7 MPa [29 - 100 psi]
Max. Suction Lift	PTFE Dry: 3.0 m Rubber Dry: 5.5 m Wet (Primed): 8.0 m	
Max. Air Consumption	5800 l/min (ANR) [204.80 SCFM]	6000 l/min (ANR) [211.86 SCFM]
Max. Discharge Vol. Per Cycle	3500 ml	2000 ml
Ambient Temp. Range	0 - 70°C [32 - 158°F]	
Liquid Temp. Range	NBR/CR 0-70°C [32-158°F] TPEE/EPDM 0-80°C [32-176°F] FKM/TPO/PTFE 0-100°C [32-212°F]	
Connections: Manifold / Air	2” Rc Female Threaded DN50/ANSI Flanged Centre Ports / ¾” Rc Air ball valve	

*Operating in the condition a fluid temperature is at 70°C or above might cause an early degradation of performance and required to change the material of air motor seal parts. Please contact your nearest distributor for details.

Note: *Factors affecting a pumps stated liquid flow rate, suction lift & solids handling capabilities include, but are not limited to; pump size, diaphragm, ball valve & ball seat, type & materials of construction, air inlet pressure & air flow capability, liquid viscosity, specific gravity, slurry content, ambient & liquid temperature, liquid inlet & liquid outlet width, piping type, piping length & overall piping configuration. A minimum supply air pressure of 30 PSI (0.2 MPa) is required to operate the pump.*

Pump Performance Curves

Rubber Diaphragm Curves

500A□J 500S□J 500F□J

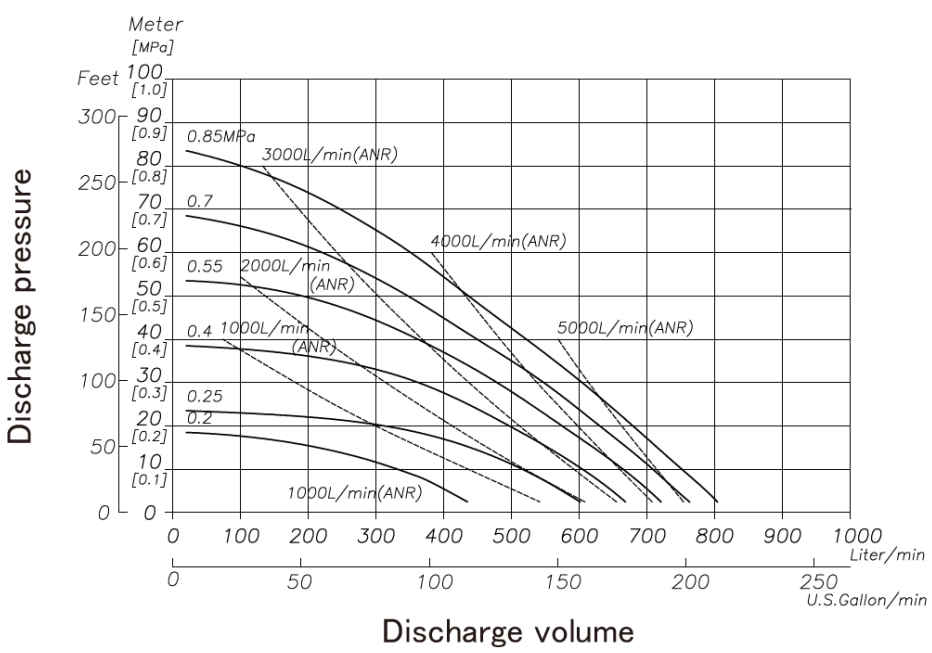

PTFE Diaphragm Curves

500ATJ/AWJ 500STJ/SWJ 500FTJ/FWJ

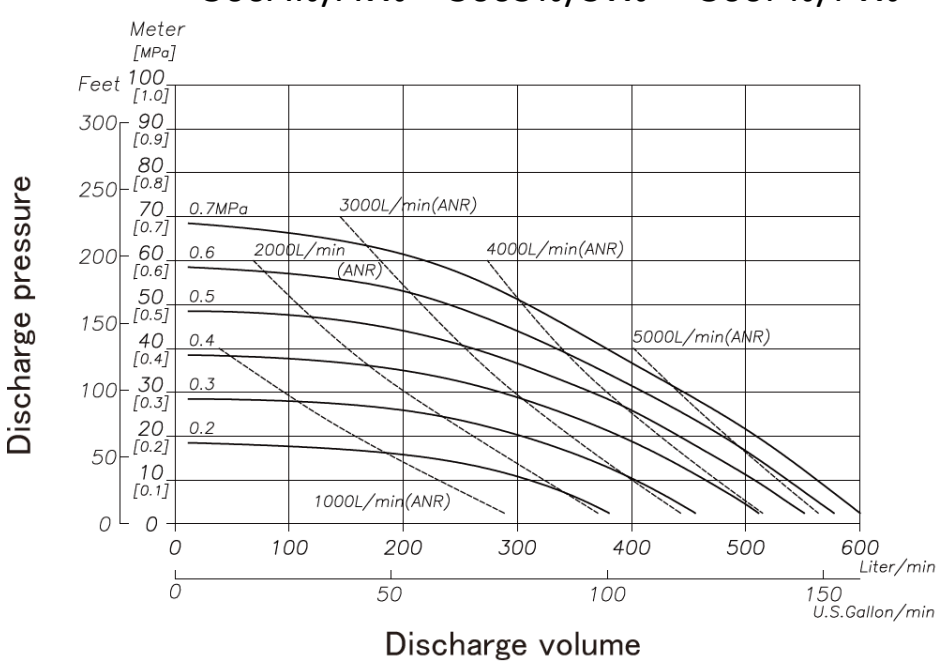

For more information about TC-X Pumps please contact: sales@iwaki.de
WWW.IWAKI.DE

Air Operated Double Diaphragm Pumps

IWAKI AIR EUROPE

Wetted Materials Of Construction

MODEL	500ACJ	500ANJ	500AEJ	500AVJ	500ATJ	500AHJ	500ASJ	500AWJ	500SCJ	500SNJ	500SEJ	500SVJ	500STJ	500SHJ	500SSJ	500SWJ
Pump Wetted Parts	ADC12 * AC4C								SCS14							
Diaphragm	CR	NBR	EPDM	FKM	PTFE	TPEE	TPO	PTFE-EPDM	CR	NBR	EPDM	FKM	PTFE	TPEE	TPO	PTFE-EPDM
Ball Valve	CR	NBR	EPDM	FKM	PTFE	NBR	EPDM	PTFE	CR	NBR	EPDM	FKM	PTFE	NBR	EPDM	PTFE
Valve Seat	CR	NBR	EPDM	FKM	PTFE	NBR	EPDM	PTFE	CR	NBR	EPDM	FKM	PTFE	NBR	EPDM	PTFE
Center Disk	A5056								SUS316							
Weight	39.4 kg [86.9 lbs]								69.0 kg [152.1 lbs)]							

MODEL	500FCJ	500FNJ	500FEJ	500FVJ	500FTJ	500FHJ	500FSJ	500FWJ
Pump Wetted Parts	S45C							
Diaphragm	CR	NBR	EPDM	FKM	PTFE	TPEE	TPO	PTFE-EPDM
Ball Valve	CR	NBR	EPDM	FKM	PTFE	NBR	EPDM	PTFE
Valve Seat	CR	NBR	EPDM	FKM	PTFE	NBR	EPDM	PTFE
Center Disk	SS400							
Weight	69.0 kg [152.1 lbs)]							

Dimensional Drawings

500 A□J・S□J・F□J

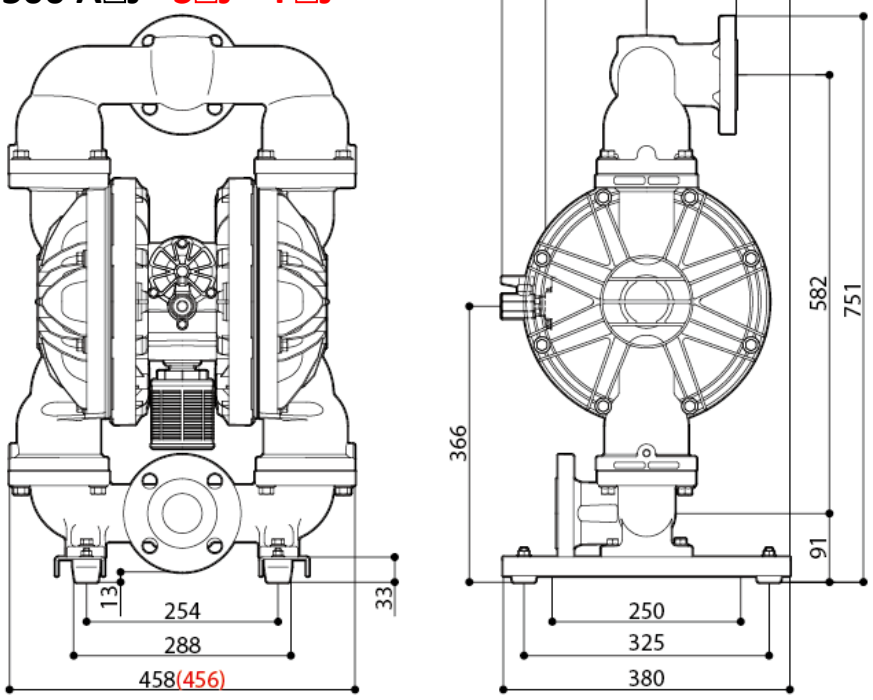



TC-X500A□J

2” Aluminium Pump
780l/min



TC-X500F□J

2” Cast Iron Pump
780l/min

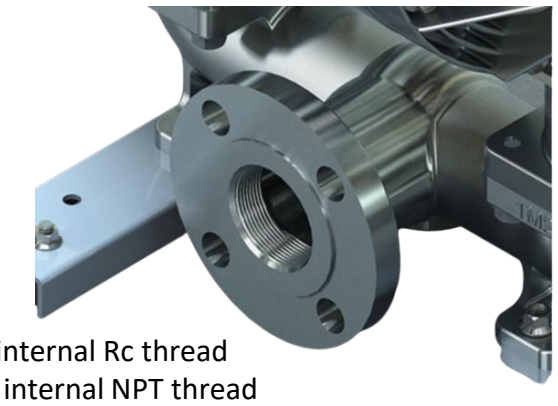

Nomenclature

Series: TC-X | 500 | A | W | J - X : Special Options

- 500: Pump Connection Size 500 (2”)
- A: Pump Body Material (Wetted)
  - A: Al
  - S: SUS316
  - F: Cast iron(Ferro)
- W: Diaphragm Material
  - W: PTFE-EPDM
  - T: PTFE
  - C: CR
  - N: NBR
  - H: TPEE
  - S: TPO
  - E: EPDM
- J: Connection Type
  - J: JIS/DIN/ANSI Flange with internal Rc thread
  - A: JIS/DIN/ANSI Flange with internal NPT thread

AODD Pump Capabilities

Self Priming	Variable Discharge Pressures	Inherently Safe Design
Run Dry	Transfer Liquid Slurries	Portable & Easy to Use
Run up to Dead Head	Transfer Large Sized Solids	Transfer Viscous Fluids
Variable Flow Rates	Handle Abrasives	Frequent Start Stop Operation
Shear Sensitivity	Transfer Chemicals	Powered by Compressed Air

CE LoopedC

Ex II2G ExhIIBT5Gb「0°C<Ta<70°C」
II2D ExhIIIBT100°CDb「0°C<Ta<70°C」

For more information about TC-X Pumps please contact: sales@iwaki.de
WWW.IWAKI.DE

JQA-QMA14279

091