Air Operated Double Diaphragm Pumps

IWAKI AIR EUROPE

TC-X500 Plastic

2” Plastic Diaphragm Pump Data Sheet

Max. Flow Rate: 650 l/min (Rubber)
Liquid Connection Size: DN50 Flanged Centre Ports
Max. Slurry Size: 8.0 mm
Max. Suction Lift: PTFE Dry: 2.0 m Rubber Dry: 5.0 m Wet (Primed): 8.0 m
Max. Discharge Pressure: 0.70 MPa (Rubber)
Check Valve Configuration: Ball Type Check Valves
Pump Wetted Material Options: Polypropylene (PPG), CFPVDF, CFPP
Diaphragm Options: PTFE-EPDM “W”**,** PTFE, CR, NBR, TPEE, TPO, EPDM, FKM
Air Motor Material: Aluminium (optional PTFE coated)
Description: 2” Plastic AODD Pumps available in PPG, CFPVDF & CFPP.
Looped C-Spring Air Spool, Aluminium Air Motor, Flanged Centre Port Connections, Ball Check Valves, SUS Base, External Plastic Silencer



TC-X500G□J
2” PPG Pump Flanged 650 l/min

500 Plastic Pump Specifications		
Pump Model	**G□J V□J C□J**	**GTJ/GWJ VTJ(-HB)/VWJ CTJ(-HB)/CWJ**
Max. Flow Rate	650 l/min [171.7 GPM]	600 l/min [158.5 GPM]
Max. Solids Size	8.0 mm	
Max. Discharge Pressure	0.7 MPa [100 psi]	
Supply Air Pressure Range	0.2 - 0.7 MPa [29 - 100 psi]	
Max. Suction Lift	PTFE Dry: 2.0 m Rubber Dry: 5.0 m Wet (Primed): 8.0 m	
Max. Air Consumption	5500 l/min (ANR) [194.3 SCFM]	6000 l/min (ANR) [211.9 SCFM]
Max. Discharge Vol Per Cycle	3500 ml	2000 ml
Ambient Temp. Range	0 - 70°C [32 - 158°F]	
Liquid Temp. Range	0 - 60°C [32 - 140°F]	
Connections: Manifolds / Air	DN50/ANSI Flanged Centre Ports / ¾”Rc Air ball valve	

Note: *Factors affecting a pumps stated liquid flow rate, suction lift & solids handling capabilities include, but are not limited to; pump size, diaphragm, ball valve & ball seat, type & materials of construction, air inlet pressure & air flow capability, liquid viscosity, specific gravity, slurry content, ambient & liquid temperature, liquid inlet & liquid outlet width, piping type, piping length & overall piping configuration. A minimum supply air pressure of 30 PSI (0.2 MPa) is required to operate the pump.*

Pump Performance Curves

Rubber Diaphragm Curves

500G□J 500V□J 500C□J

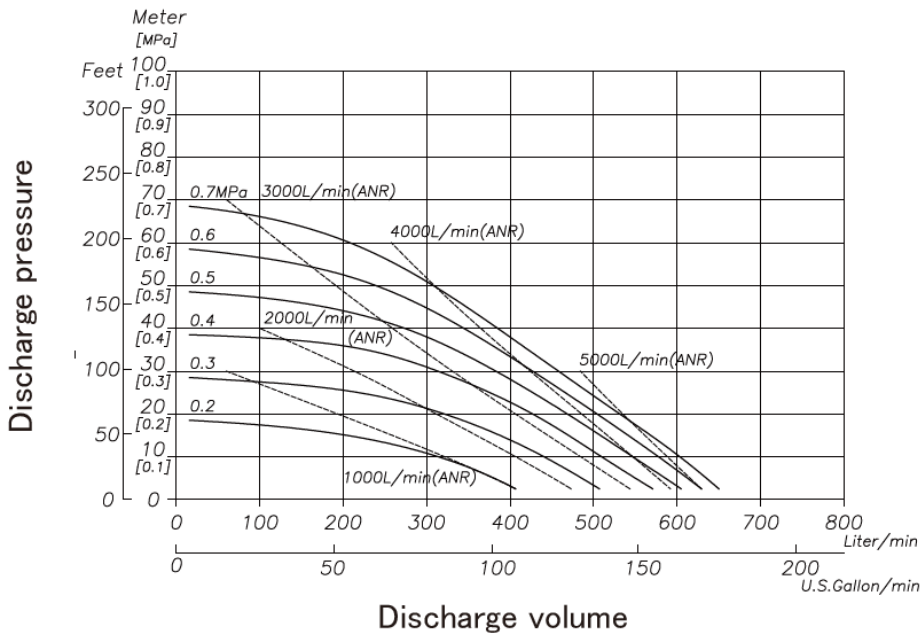

PTFE/PTFE-EPDM Diaphragm Curves

500GTJ/GWJ 500VTJ/VWJ 500CTJ-HB/CWJ

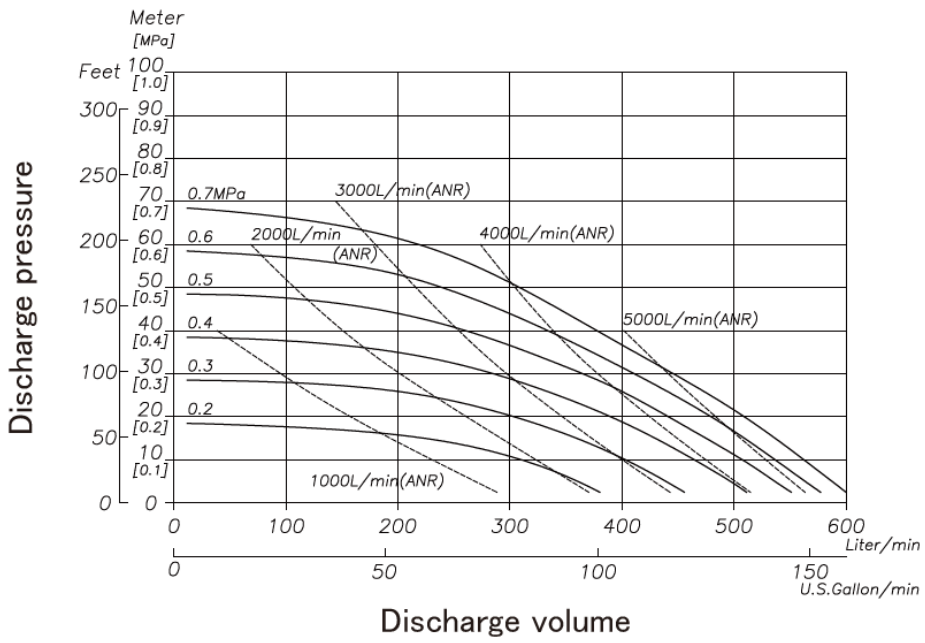

For more information about TC-X Pumps please contact: sales@iwaki.de
WWW.IWAKI.DE

Air Operated Double Diaphragm Pumps

IWAKI AIR EUROPE

Wetted Materials Of Construction

MODEL	500GCJ	500GNJ	500GEJ	500GVJ	500GTJ	500GHJ	500GSJ	500GWJ	500VEJ	500VVJ	500VTJ	500VSJ	500VWJ
Pump Wetted Parts	PPG								PVDF				
Diaphragm	CR	NBR	EPDM	FKM	PTFE	TPEE	TPO	PTFE-EPDM	EPDM	FKM	PTFE	TPO	PTFE-EPDM
Ball Valve	CR	NBR	EPDM	FKM	PTFE	NBR	EPDM	PTFE	EPDM	FKM	PTFE	EPDM	PTFE
Valve Seat	PP								PTFE				
Center Disk	PPG								PVDF				
Weight	37.5 kg [82.7 lbs]								44.5 kg [98.1 lbs]				

MODEL	500CCJ	500CNJ	500CEJ	500CVJ	500CTJ	500CHJ	500CSJ	500CWJ
Pump Wetted Parts	CFPP							
Diaphragm	CR	NBR	EPDM	FKM	PTFE	TPEE	TPO	PTFE-EPDM
Ball Valve	CR	NBR	EPDM	FKM	PTFE	NBR	EPDM	PTFE
Valve Seat	CFPP							
Center Disk	CFPP							
Weight	37.5 kg [82.7 lbs]							

Dimensional Drawings

500 G□J ▪ C□J ▪ V□J

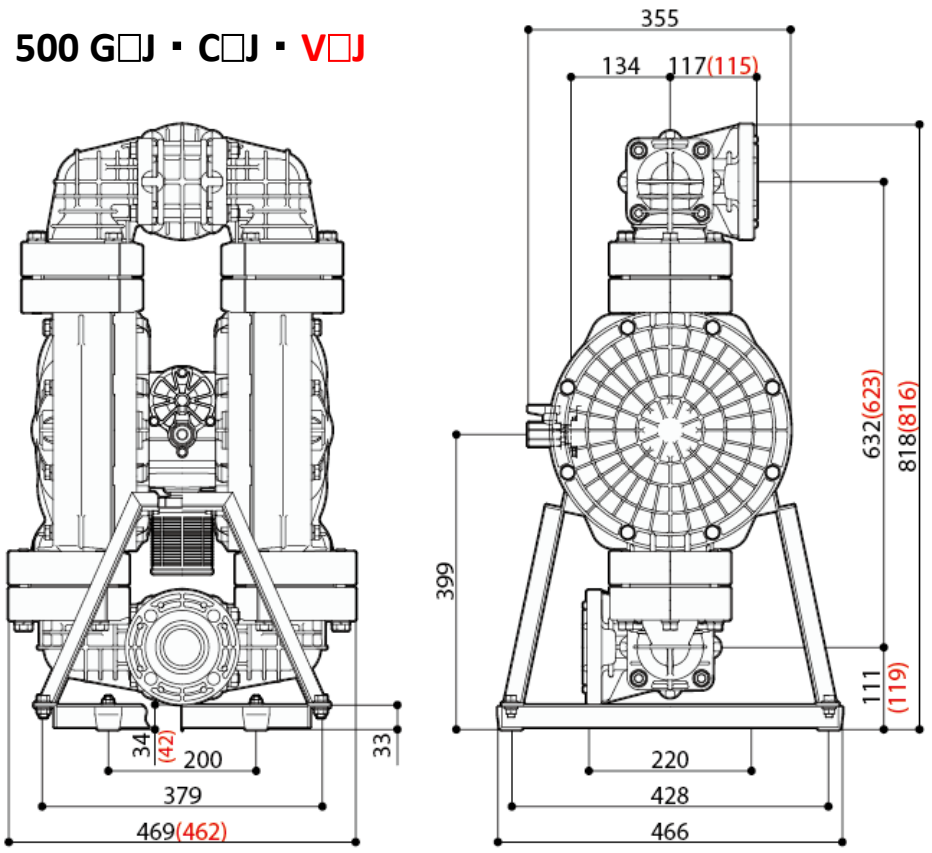



TC-X500V□J / TC-X500C□J

2” CFPVDF / CFPP Pump Flanged
650 l/min

Nomenclature

Series TC-X | 500 | G | W | J - X — Special Options

- 500: Pump Connection Size — 500 (2” / 50 mm)
- G: Pump Body Material (Wetted) — G: PPG; V: CFPVDF; C: CFPP
- W: Diaphragm Material — W: PTFE-EPDM bonded; T: PTFE; C: CR; N: NBR; H: TPEE; S: TPO; E: EPDM
- J: Connection Type — J: JIS/DIN/ANSI Flange

AODD Pump Capabilities

Self Priming	Variable Discharge Pressures	Inherently Safe Design
Run Dry	Transfer Liquid Slurries	Portable & Easy to Use
Run up to Dead Head	Transfer Large Sized Solids	Transfer Viscous Fluids
Variable Flow Rates	Handle Abrasives	Frequent Start Stop Operation
Shear Sensitivity	Transfer Chemicals	Powered by Compressed Air

CE LoopedC

Ex II2G ExhIIBT5Gb「0°C<Ta<70°C」
II2D ExhIIIBT100°CDb「0°C<Ta<70°C」

For more information about TC-X Pumps please contact: sales@iwaki.de
WWW.IWAKI.DE

JQA-QMA14279

091