# Air Operated Double Diaphragm Pumps

IWAKI AIR EUROPE

# TC-X500 Metallic Flap Valve

## 2” HD Metallic Flap Valve Pump Data Sheet

Mechanical HD Spool

**Max. Flow Rate:** 600 l/min (Rubber)
**Max. Discharge Pressure:** 0.7 MPa
**Max. Slurry Size:** Φ 30 mm spherical Φ 15 × 45 mm oblong
**Max. Suction Lift:** Rubber Dry: 5.0 m Wet (Primed): 8.0 m
**Liquid Connection Size:** 2”
**Liquid Connection Configuration:** Flanged Centre Ports
**Pump Wetted Material Options:** Aluminium
**Air Motor Material:** Aluminium
**Diaphragm Options:** NBR, TPO
**Check Valve Configuration:** Hinged Flap Type, Check Valve material, HNBR
**Air Motor Model:** Heavy Duty Mechanical Coil Spring Air Spool
**Exhaust Configuration:** External Plastic Exhaust Silencer (x2)
**Base & Footprint:** Heavy Duty Steel Legs & Rubber Feet.

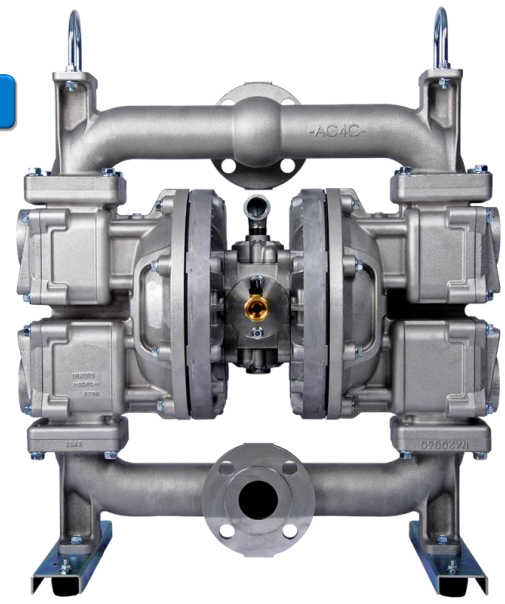

**TC-X500A☐JW-M**
2” HD Aluminium Pump
600l/min Flap Check Valves

| 500 HD Metallic Flap Valve Pump Specifications | |
|---|---|
| **Pump Model** | **AN AS** |
| **Max. Flow Rate** | 600 l/min [158.5 GPM] |
| **Max. Solids Size** | Φ 30 mm spherical Φ 15 x 45 mm oblong |
| **Max. Discharge Pressure** | 0.7 MPa [100 psi] |
| **Supply Air Pressure Range** | 0.1 - 0.7 MPa [14 - 100 psi] |
| **Max. Suction Lift** | Rubber Dry: 5.0 m Wet (Primed): 8.0 m |
| **Max. Air Consumption** | 6000 l/min (ANR) [211.9 SCFM] |
| **Max. Discharge Vol. Per Cycle** | 3500 ml |
| **Ambient Temp. Range** | 0 - 70°C [32 - 158°F] |
| **Liquid Temp. Range** | 0 - 70°C [32 - 158°F] |
| **Connections: Manifolds / Air** | 2” Flanged Centre Ports / ¾” Air ball valve |

***Note:*** *Factors affecting a pumps stated liquid flow rate, suction lift & solids handling capabilities include, but are not limited to; pump size, diaphragm, ball valve & ball seat, type & materials of construction, air inlet pressure & air flow capability, liquid viscosity, specific gravity, slurry content, ambient & liquid temperature, liquid inlet & liquid outlet width, piping type, piping length & overall piping configuration. A minimum supply air pressure of 14 psi (0.1 MPa) is required to operate the pump.*

## Pump Performance Curves

500A☐JW-M

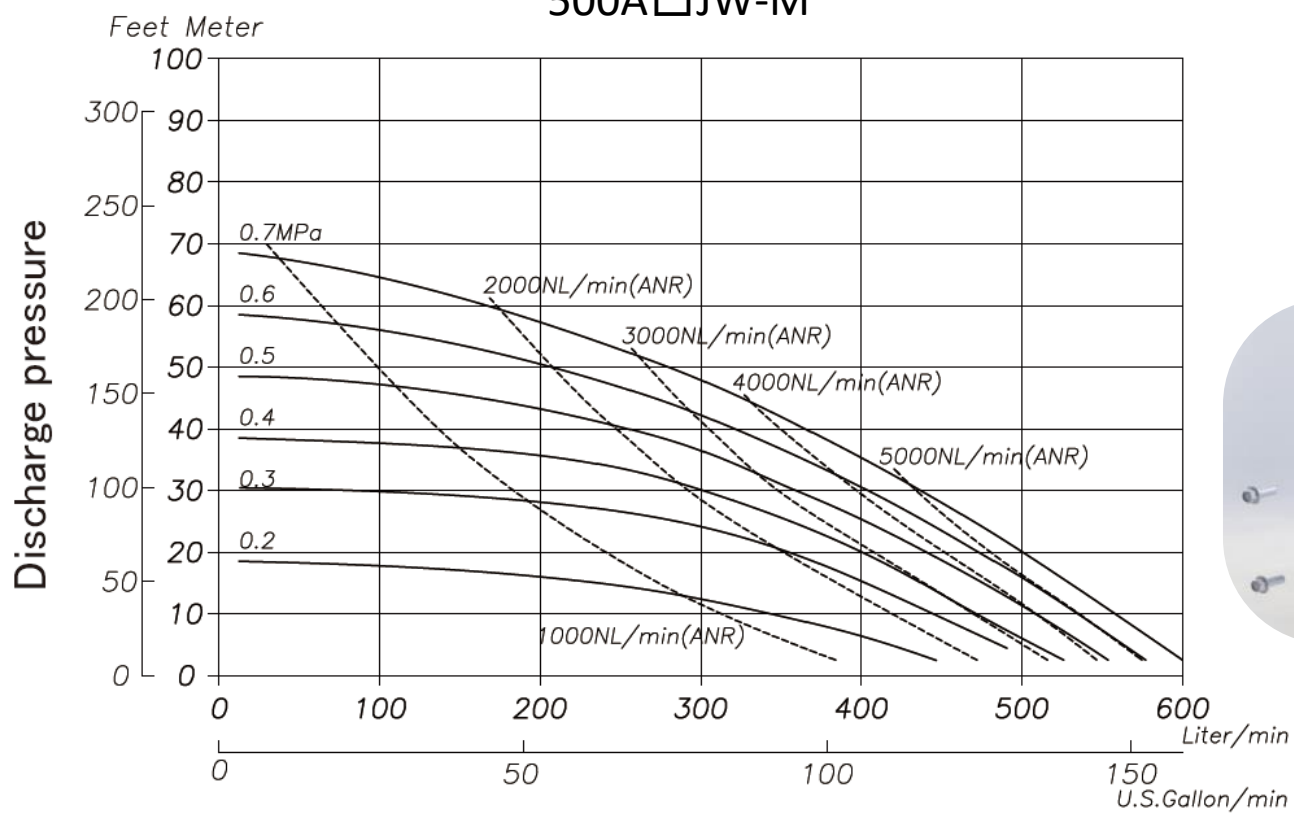


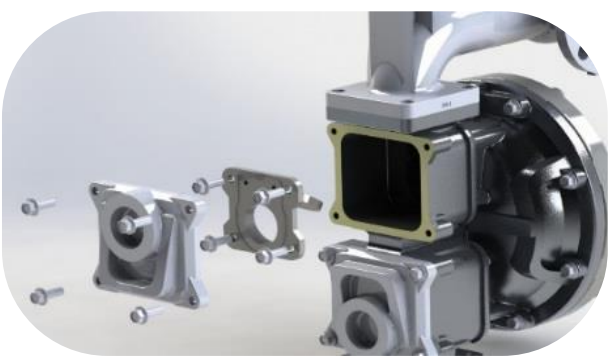

***For more information about TC-X Pumps please contact:*** sales@iwaki.de
***WWW.IWAKI.DE***

# Air Operated Double Diaphragm Pumps

## Wetted Materials Of Construction

| MODEL | 500ANJW-M | 500ASJW-M |
|---|---|---|
| Pump wetted parts | AC4C | |
| Diaphragm | NBR | TPO |
| Flap valve / valve seat | HNBR | |
| Center disk | A5056 | |
| Weight | 73.0KG (161.0 LBS) | |



**Hydrogenated NBR**
**Flap valve**

## Dimensional Drawings

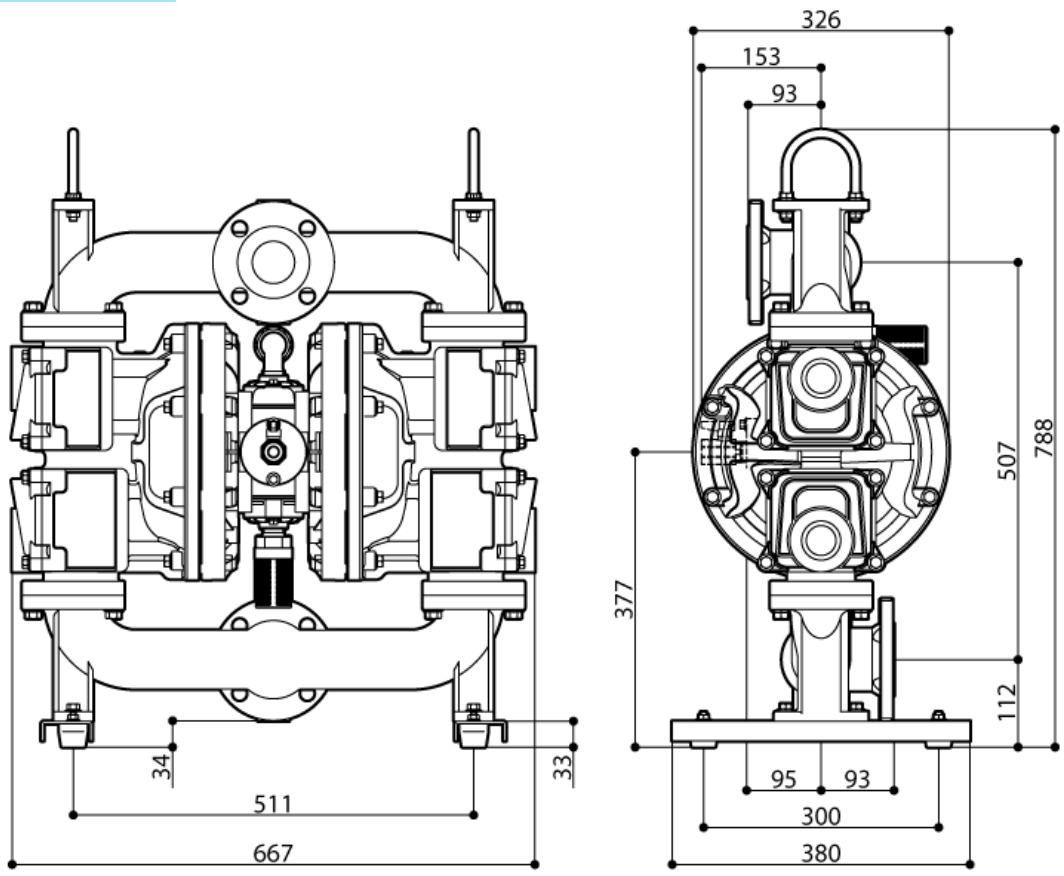


## Nomenclature

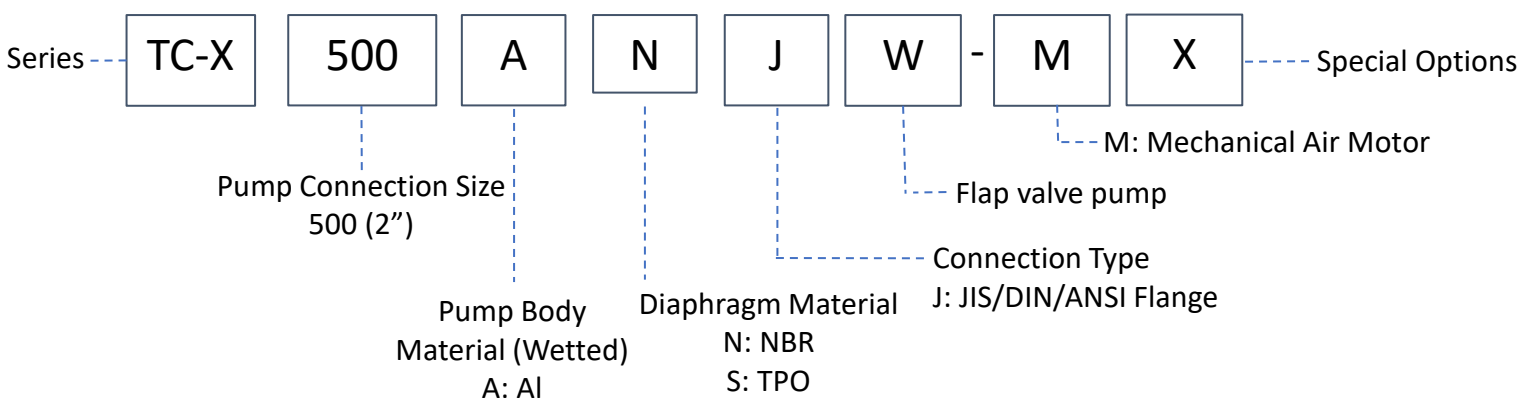


## AODD Pump Capabilities

| | | |
|---|---|---|
| Self Priming | Variable Discharge Pressures | Inherently Safe Design |
| Run Dry | Transfer Liquid Slurries | Portable & Easy to Use |
| Run up to Dead Head | Transfer Large Sized Solids | Transfer Viscous Fluids |
| Variable Flow Rates | Handle Abrasives | Frequent Start Stop Operation |
| Shear Sensitivity | Transfer Chemicals | Powered by Compressed Air |

II2G ExhIIBT5Gb「0°C<Ta<70°C」
II2D ExhIIIBT100°CDb「0°C<Ta<70°C」

***For more information about TC-X Pumps please contact:*** sales@iwaki.de
***WWW.IWAKI.DE***



JQA-QMA14279
091