Air Operated Double Diaphragm Pumps

IWAKI AIR EUROPE

TC-X500 Sanitary Pump

2” Sanitary Pump Data Sheet

LoopedC

Max. Flow Rate: 330 l/min
Liquid Connection Size: ISO 2.0s (3A Ferrule as optional).
Liquid Connection Configuration: ISO Ferrule
Max. Slurry Size: 8.0 mm or less
Max. Suction Lift: Dry: 3.5 m. Wet (Primed): 8.0 m
Max. Discharge Pressure: 0.7 MPa
Check Valve Configuration: Ball Type Check Valves PTFE FDA Complaint
Pump Wetted Material Options: Stainless Steel, 316L FDA Compliant
Diaphragm Options: PTFE-EPDM bonded 1pc “W”. FDA Compliant
Air Motor Material: Electroless nickel plated Aluminium
Air Motor Model: Looped C® Spring Air Spool
Exhaust Configuration: External Plastic Exhaust Silencer (x1)
Base & Footprint:360° Rotatable Base



TC-X500SWFR
2” 316L Sanitary Pump
330 l/min

Description & Features: It rotates 360° for draining and maintenance. Tri-clamp ferrule connections. Excellent chemical resistance Metallic AODD Pumps fitted with looped C Air Spool, Ekonol® Seal Rings & Fully independent Pilot Valves for increased performance, reliability & extended life cycle.

500 Sanitary Pump Specifications	
Pump Model	**TC-X500SWFR**
Max. Flow Rate	330 l/min [87.2 GPM]
Max. Solids Size	8.0 mm or less
Max. Discharge Pressure	0.7 MPa [100 psi]
Supply Air Pressure Range	0.2 - 0.7 MPa [29 - 100 psi]
Max. Suction Lift	Dry: 3.5 meters. Wet (Primed): 8.0 meters
Max. Air Consumption	4000 l/min (ANR) [141.3 SCFM]
Max. Discharge Vol. Per Cycle	1000 ml
Ambient Temp. Range	0 - 70°C [32 - 158°F]
Liquid Temp. Range	0 - 80°C [32 - 178°F]
Connections: Manifolds / Air	ISO 2.0s Ferrule / ¾” Air ball valve

Note: *Factors affecting a pumps stated liquid flow rate, suction lift & solids handling capabilities include, but are not limited to; pump size, diaphragm, ball valve & ball seat, type & materials of construction, air inlet pressure & air flow capability, liquid viscosity, specific gravity, slurry content, ambient & liquid temperature, liquid inlet & liquid outlet width, piping type, piping length & overall piping configuration. A minimum supply air pressure of 30 PSI (0.2 MPa) is required to operate the pump.*

Pump Performance Curves

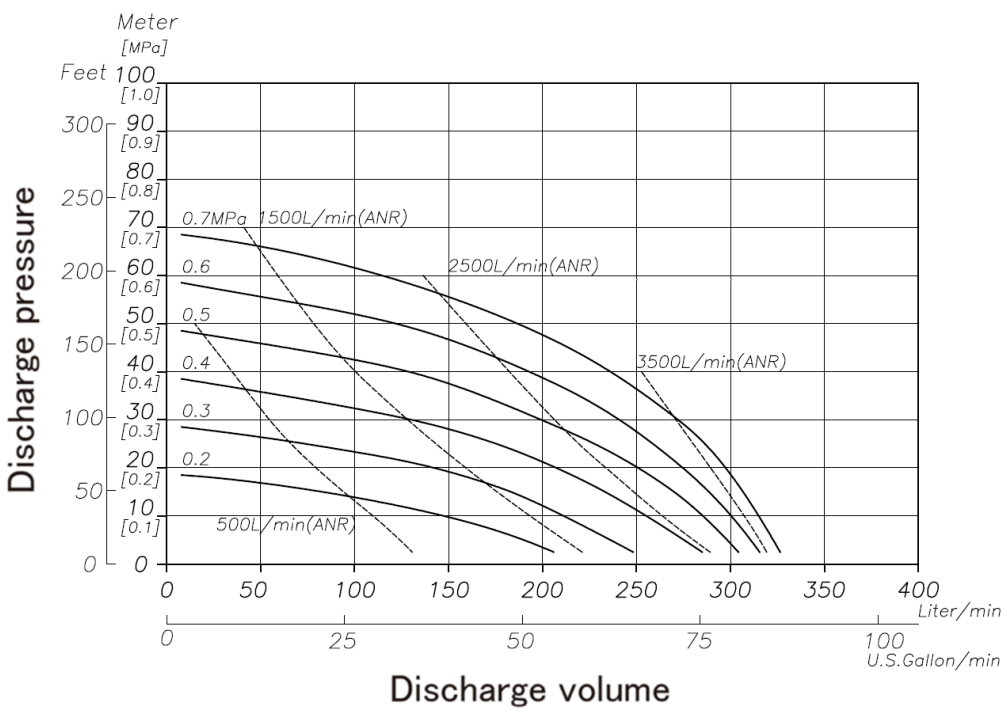

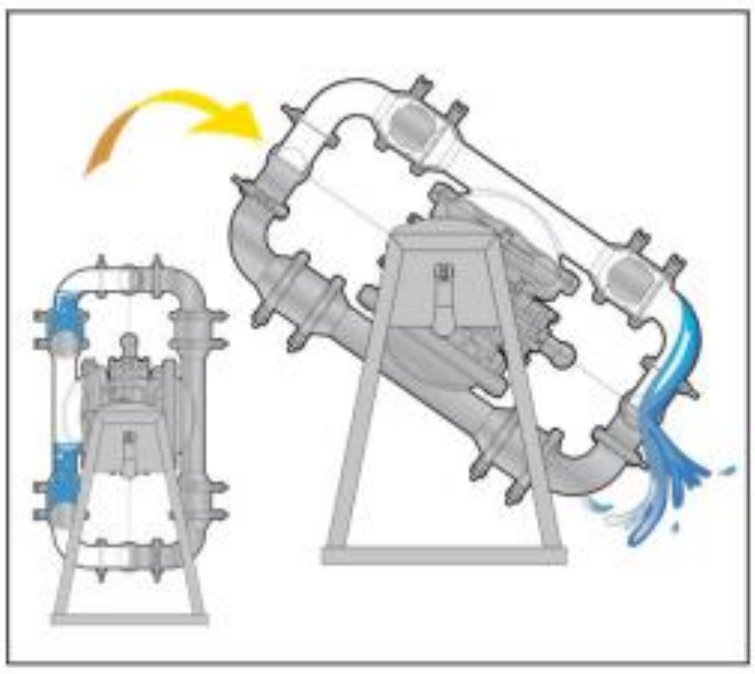

The rotatable base enables to drain the residues.
The pump can be fixed at preferred position.

For more information about TC-X Pumps please contact: sales@iwaki.de

Air Operated Double Diaphragm Pumps

IWAKI AIR EUROPE

Wetted Materials Of Construction

Pump Wetted Parts	SUS 316L
Diaphragm	"W" PTFE-EPDM 1 Pc BONDED
Ball valve	PTFE
Packing	PTFE/EPDM
Weight	41.0 kg [90.4 lbs]

Dimensional Drawings

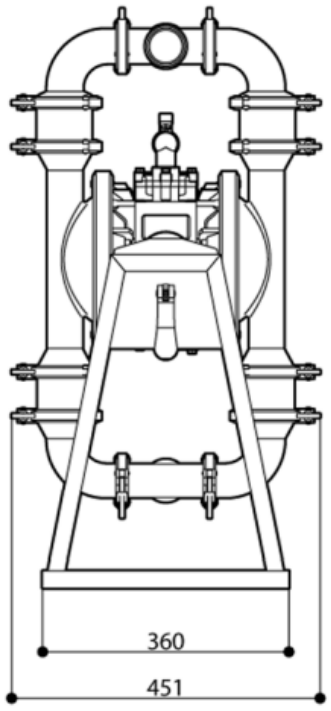

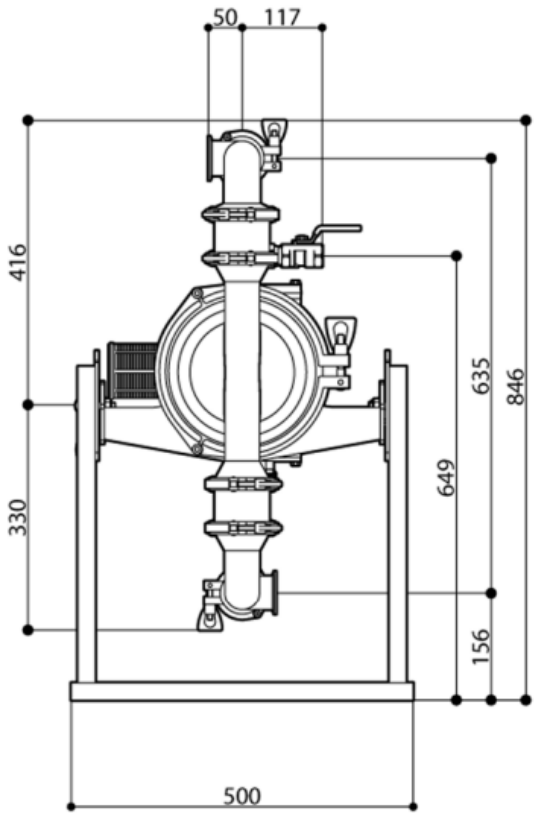



Nomenclature

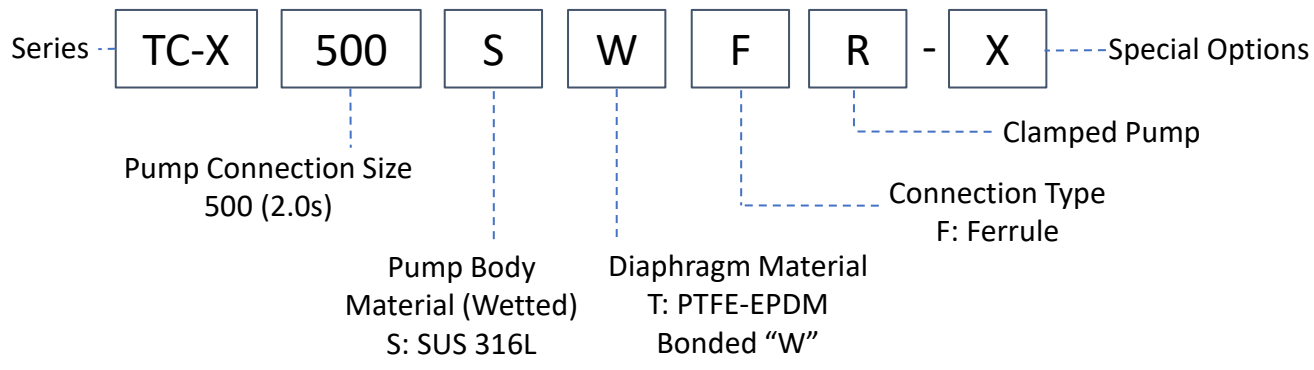



One piece easy clean PTFE sheet With a bonded EPDM rubber backing. "W" Diaphragm

FDA

AODD Pump Capabilities

Self Priming	Variable Discharge Pressures	Inherently Safe Design
Run Dry	Transfer Liquid Slurries	Portable & Easy to Use
Run up to Dead Head	Transfer Large Sized Solids	Transfer Viscous Fluids
Variable Flow Rates	Handle Abrasives	Frequent Start Stop Operation
Shear Sensitivity	Transfer Chemicals	Powered by Compressed Air

CE LoopedC

Ex II2G ExhIIBT5Gb「0°C<Ta<70°C」
II2D ExhIIIBT100°CDb「0°C<Ta<70°C」

JQA-QMA14279

091

For more information about TC-X Pumps please contact: sales@iwaki.de