Air Operated Double Diaphragm Pumps

IWAKI AIR EUROPE

TC-X800 Metallic

3” Metallic Diaphragm Pump Data Sheet

LoopedC

Max. Flow Rate: 1050 l/min (Rubber fitted)
Liquid Connection Size: Dual connection 3” Rc Female & Flanged Centre Ports
Max. Slurry Size: 10.0 mm
Max. Suction Lift: PTFE Dry: 3.0 m Rubber Dry: 5.5 m Wet (Primed): 8.0 m
Max. Discharge Pressure: 0.85 MPa (Rubber fitted)
Check Valve Configuration: Ball Type Check Valves
Pump Wetted Material Options: Aluminium, Stainless Steel, Cast Iron
Diaphragm Options: PTFE-EPDM “W”, PTFE, CR, NBR, TPEE, TPO, EPDM, FKM
Air Motor Material: Aluminium (optional PTFE coated)
Description: 3” Metallic AODD Pumps available in Al, SUS, FC,
Looped C-Spring Air Spool, Aluminium Air Motor, Dual Connection
Threaded Flanged Centre Ports, Ball Check Valves, External Plastic Silencer



TC-X800S□J
3” Flanged Pump 1050 l/min

800 Metallic Pump Specifications		
Pump Model	**A□J S□J F□J**	**ATJ/AWJ STJ/SWJ FTJ/FWJ**
Max. Flow Rate	1050 l/min [277.4 GPM]	700 l/min [184.9 GPM]
Max. Solids Size	10.0 mm	
Max. Discharge Pressure	0.85 MPa [125 psi]	0.7 MPa [100 psi]
Supply Air Pressure Range	0.2 - 0.85 MPa [29 - 125 psi]	0.2 - 0.7 MPa [29 - 100 psi]
Max. Suction Lift	PTFE Dry: 3.0 m Rubber Dry: 5.5 m Wet (Primed): 8.0 m	
Max. Air Consumption	7000 l/min (ANR) [247.17 SCFM]	6800 l/min (ANR) [240.11 SCFM]
Max. Discharge Vol. Per Cycle	6800 ml	3200 ml
Ambient Temp. Range	0 - 70°C [32 - 158°F]	
Liquid Temp. Range	NBR/CR 0-70°C [32-158°F] TPEE/EPDM 0-80°C [32-176°F] FKM/TPO/PTFE 0-100°C [32-212°F]	
Connections: Manifold / Air	3” Rc Female Threaded DN80/ANSI Flanged Centre Ports / ¾” Air ball valve	

*Operating in the condition a fluid temperature is at 70°C or above might cause an early degradation of performance and required to change the material of air motor seal parts. Please contact your nearest distributor for details.

Note: *Factors affecting a pumps stated liquid flow rate, suction lift & solids handling capabilities include, but are not limited to; pump size, diaphragm, ball valve & ball seat, type & materials of construction, air inlet pressure & air flow capability, liquid viscosity, specific gravity, slurry content, ambient & liquid temperature, liquid inlet & liquid outlet width, piping type, piping length & overall piping configuration. A minimum supply air pressure of 30 PSI (0.2 MPa) is required to operate the pump.*

Pump Performance Curves

Rubber Diaphragm Curves

800A□J 800S□J 800F□J

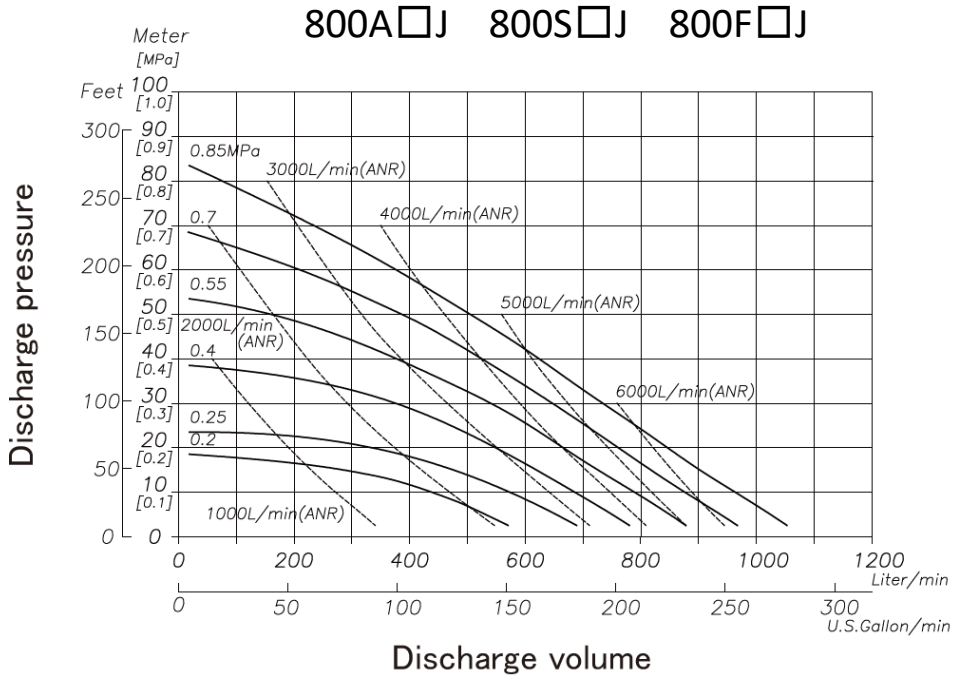

PTFE Diaphragm Curves

800ATJ/AWJ 800STJ/SWJ 800FTJ/FWJ

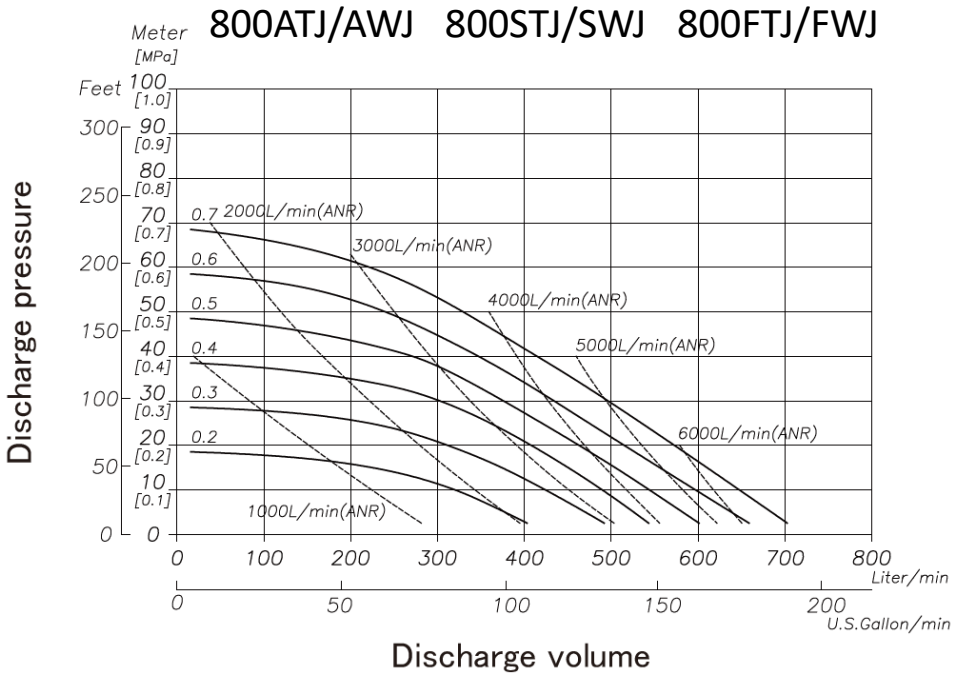

For more information about TC-X Pumps please contact: sales@iwaki.de

Air Operated Double Diaphragm Pumps

IWAKI AIR EUROPE

Wetted Materials Of Construction

MODEL	800ACJ	800ANJ	800AEJ	800AVJ	800ATJ	800AHJ	800ASJ	800AWJ	800SCJ	800SNJ	800SEJ	800SVJ	800STJ	800SHJ	800SSJ	800SWJ
Pump Wetted Parts	AC4C								SCS14							
Diaphragm	CR	NBR	EPDM	FKM	PTFE	TPEE	TPO	PTFE-EPDM	CR	NBR	EPDM	FKM	PTFE	TPEE	TPO	PTFE-EPDM
Ball Valve	CR	NBR	EPDM	FKM	PTFE	NBR	EPDM	PTFE	CR	NBR	EPDM	FKM	PTFE	NBR	EPDM	PTFE
Valve Seat	CR	NBR	EPDM	FKM	PTFE	NBR	EPDM	PTFE	CR	NBR	EPDM	FKM	PTFE	NBR	EPDM	PTFE
Center Disk	A5056								SUS316							
Weight	68.5 kg [151.0 lbs]								144.5 kg [318.6 lbs)]							

MODEL	800FCJ	800FNJ	800FEJ	800FVJ	800FTJ	800FHJ	800FSJ	800FWJ
Pump Wetted Parts	S45C							
Diaphragm	CR	NBR	EPDM	FKM	PTFE	TPEE	TPO	PTFE-EPDM
Ball Valve	CR	NBR	EPDM	FKM	PTFE	NBR	EPDM	PTFE
Valve Seat	CR	NBR	EPDM	FKM	PTFE	NBR	EPDM	PTFE
Center Disk	SUS316							
Weight	144.5 kg [318.6 lbs)]							

Dimensional Drawings

800A□J・S□J・F□J

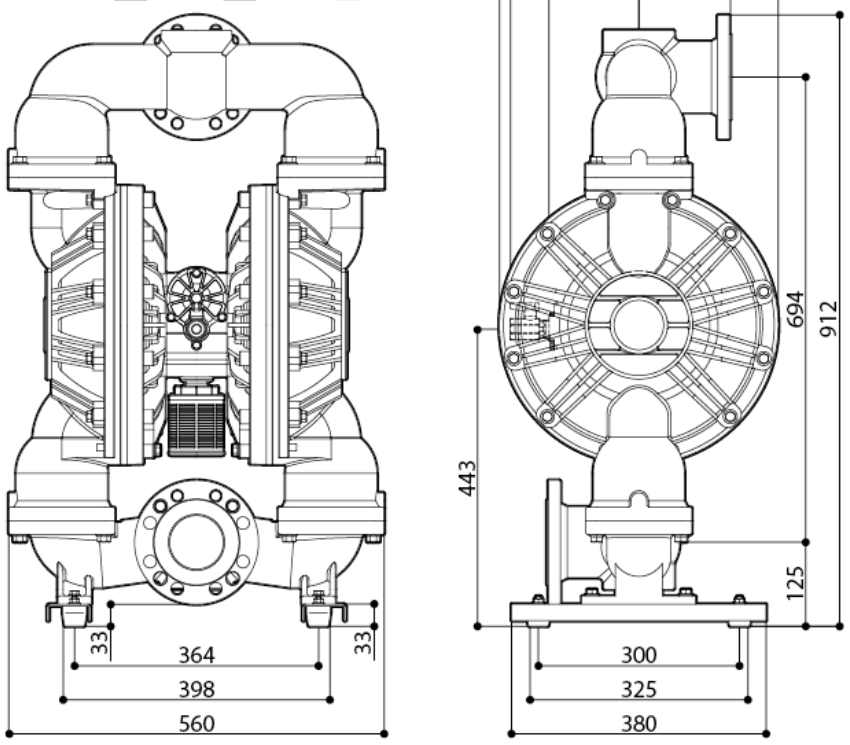



TC-X800A□J
3” Aluminium Pump
1050 l/min



TC-X800F□J
3” Cast Iron Pump
1050 l/min

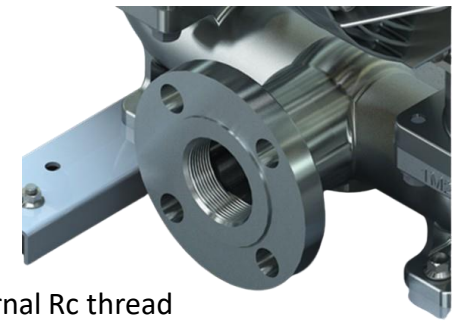

Nomenclature

Series: TC-X | 800 | A | W | J | - | X (Special Options)

Pump Connection Size
800 (3”)

Pump Body Material (Wetted)
A: Al
S: SUS
F: Cast Iron

Diaphragm Material
W: PTFE-EPDM
T: PTFE
C: CR
N: NBR
H: TPEE
S: TPO
E: EPDM
V: FKM

Connection Type
J: JIS/DIN/ANSI Flange with internal Rc thread
A: JIS/DIN/ANSI Flange with internal NPT thread

AODD Pump Capabilities

- Self Priming
- Run Dry
- Run up to Dead Head
- Variable Flow Rates
- Shear Sensitivity
- Variable Discharge Pressures
- Transfer Liquid Slurries
- Transfer Large Sized Solids
- Handle Abrasives
- Transfer Chemicals
- Inherently Safe Design
- Portable & Easy to Use
- Transfer Viscous Fluids
- Frequent Start Stop Operation
- Powered by Compressed Air

CE LoopedC

Ex II2G ExhIIBT5Gb「0°C<Ta<70°C」
II2D ExhIIIBT100°CDb「0°C<Ta<70°C」

For more information about TC-X Pumps please contact: sales@iwaki.de

JQA-QMA14279

091