Air Operated Double Diaphragm Pumps

IWAKI AIR EUROPE

TC-X800ST-FDA / SW-FDA

3” SUS Diaphragm Pump FDA-compliant Data Sheet

Max. Flow Rate: 700 l/min
Liquid Connection Size: Ferrule 4.0s (Tri-clamp)
Max. Slurry Size: 10.0 mm
Max. Suction Lift: Dry: 3.0 m Wet (Primed): 8.0 m
Max. Discharge Pressure: 0.7 MPa
Check Valve Configuration: PTFE Ball Type Check Valves
Pump Wetted Material Options: Stainless Steel-SCS14 electro-polished
Diaphragm Options: PTFE-EPDM “W”, PTFE “T”
Air Motor Material: Aluminium PTFE coated grey
Description: 3” Metallic AODD Pumps SUS Looped C Spring Air Spool, Aluminium Air Motor PTFE coated, Ferrule connection, PTFE- Ball Check Valves, External Plastic Silencer



Electro-Polished SCS14 wetted parts

800S□-FDA SCS14 Metallic Pump Specifications	
Pump Model	**ST-FDA SW-FDA**
Max. Flow Rate	700 l/min [121.5 GPM]
Max. Solids Size	10.0 mm
Max. Discharge Pressure	0.7 MPa [100 psi]
Supply Air Pressure Range	0.2 - 0.7 MPa [29 - 100 psi]
Max. Suction Lift	Dry: 3.0 m Wet (Primed): 8.0 m
Max. Air Consumption	6800 l/min (ANR) [240.11 SCFM]
Max. Discharge Vol. Per Cycle	3200 ml
Ambient Temp. Range	0 - 70°C [32 - 158°F]
Liquid Temp. Range	PTFE 0-100°C [32-212°F]
Connections Manifolds / Air	Ferrule 4.0s (Tri-Clamp) Centre Ports / ¾” Rc Air ball valve

*Operating in the condition a fluid temperature is at 70°C or above might cause an early degradation of performance and required to change the material of air motor seal parts. Please contact your nearest distributor for details.

Note: *Factors affecting a pumps stated liquid flow rate, suction lift & solids handling capabilities include, but are not limited to; pump size, diaphragm, ball valve & ball seat, type & materials of construction, air inlet pressure & air flow capability, liquid viscosity, specific gravity, slurry content, ambient & liquid temperature, liquid inlet & liquid outlet width, piping type, piping length & overall piping configuration. A minimum supply air pressure of 30 PSI (0.2 MPa) is required to operate the pump.*

Pump Performance Curve

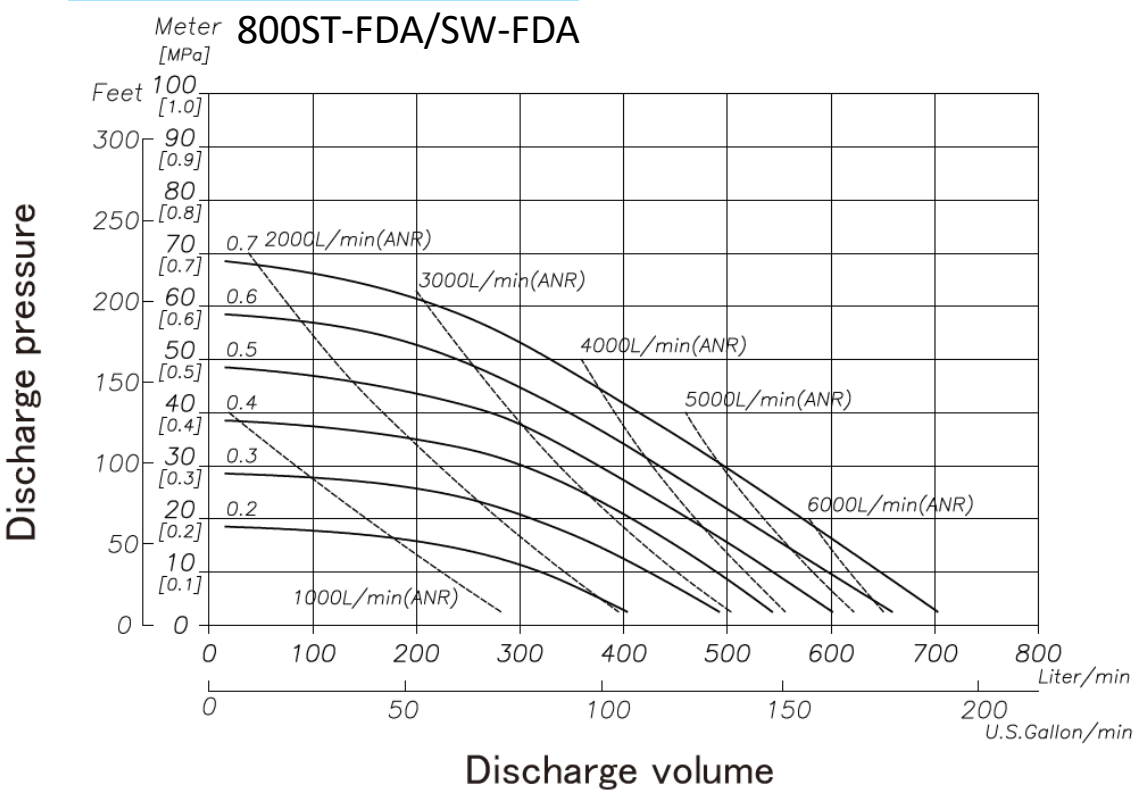



Grey PTFE coated ALU Motor for Outside protection

For more information about TC-X Pumps please contact: sales@iwaki.de
WWW.IWAKI.DE

Air Operated Double Diaphragm Pumps

Wetted Materials Of Construction

MODEL	800ST-FDA	800SW-FDA
Pump Wetted Parts	SCS14 Electro-polished	
Diaphragm	PTFE	PTFE-EPDM
Ball Valve	PTFE	PTFE
Valve Seat	PTFE	PTFE
Center Disk	SUS316	
Weight	144.5 kg [318.6 lbs)]	



TC-X800SW-FDA:
W-Diaphragms
For easy cleaning
Long lifetime

Dimensional Drawings

800 S□-FDA

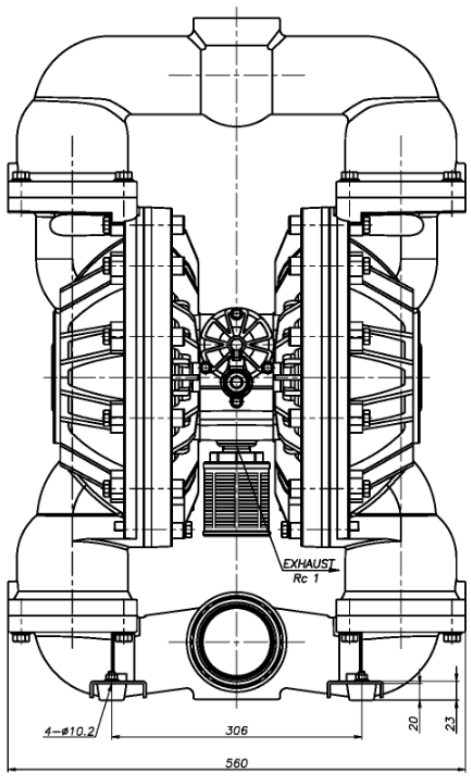

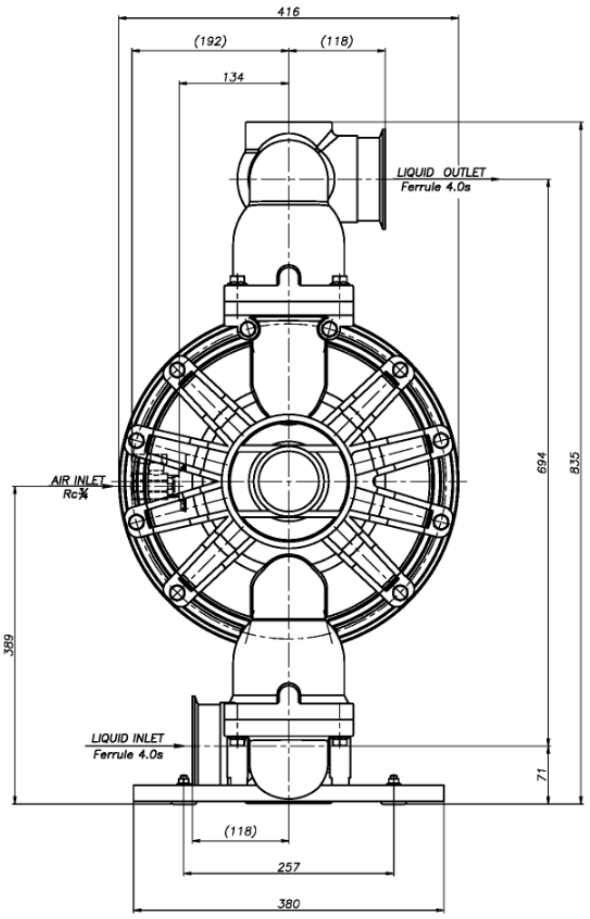

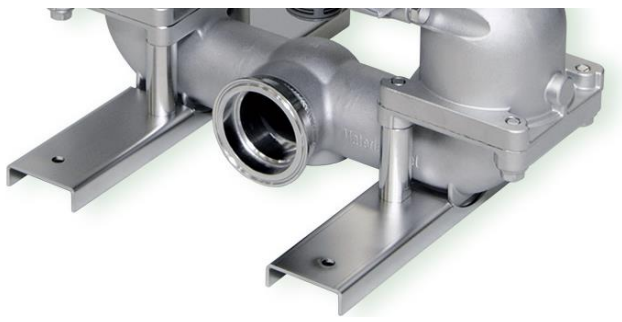

Ferrule Food connections
(Tri-Clamp)

Nomenclature

Series TC-X | 800 | S | W - FDA

- Connection Type: Ferrule 4.0s (Tri-Clamp)
- Motor specifics: PTFE Coated aluminium motor
- Wetted material: SCS14 Electro-polished
- Pump Connection Size
- Pump Body Material (Wetted) S: SCS14 –(SUS316)
- Diaphragm Material W: PTFE-EPDM Bonded easy clean; T: PTFE

AODD Pump Capabilities

Self Priming	Variable Discharge Pressures	Inherently Safe Design
Run Dry	Transfer Liquid Slurries	Portable & Easy to Use
Run up to Dead Head	Transfer Large Sized Solids	Transfer Viscous Fluids
Variable Flow Rates	Handle Abrasives	Frequent Start Stop Operation
Shear Sensitivity	Transfer Chemicals	Powered by Compressed Air

II2G ExhIIBT5Gb「0°C<Ta<70°C」
II2D ExhIIIBT100°CDb「0°C<Ta<70°C」

For more information about TC-X Pumps please contact: sales@iwaki.de
WWW.IWAKI.DE

JQA-QMA14279
091